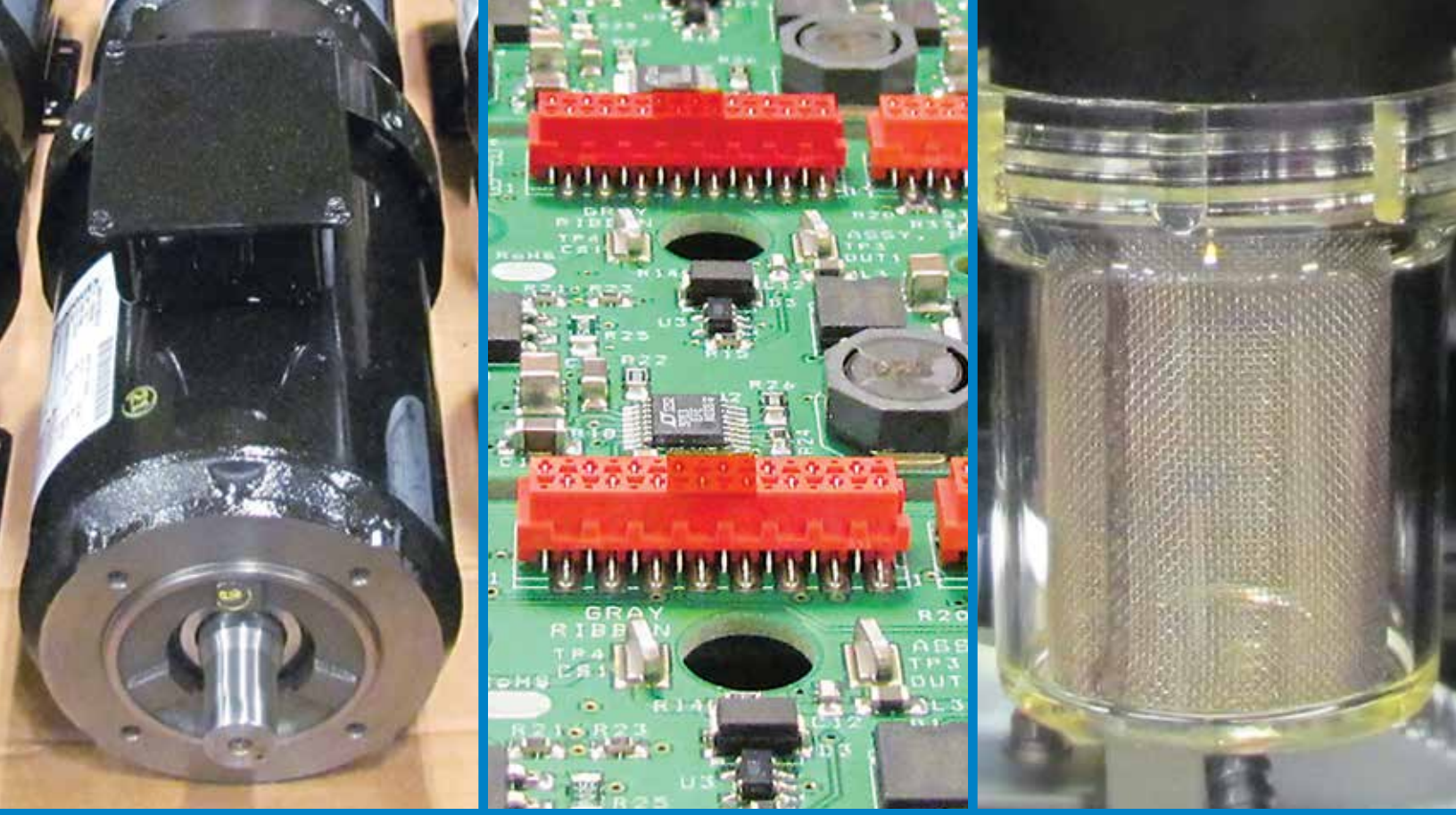

DIGITAL | EQUIPMENT | ACCESSORIES

PARTS CATALOG 2017

AIR TECHNIQUES equipped for life®

Equipped for Life® *with Air Techniques*

Dear Valued Customer:

As a leading innovator and manufacturer of high quality dental products, our number one priority is ensuring complete satisfaction by providing you with cutting-edge technology and excellent customer satisfaction and technical support. Our Air Techniques team is proud of our 55-year heritage in delivering reliable service to the dental professional. Whether the need is digital imaging, equipment or merchandise, we can provide solutions through our network of authorized dealer partners, who support Air Techniques with the best in sales, installation and service.

As you review our 2017 product catalog you will notice several exciting new product innovations. In our Digital Imaging category, we bring you an expanded line of CamX® camera systems. Our new CamX Triton HD intraoral camera with interchangeable head system provides valuable support in dental treatments and fosters patient understanding of treatment recommendations. From communication and caries diagnostics to documentation and tracking progress, we've got you covered.

Also, 2017 brings innovation to our ScanX® Digital Radiography Systems and ProVecta® S-Pan/Ceph X-rays, as we introduce our new DBSWIN software, the "digital imaging center for the modern operatory." This intuitive imaging software offers simplicity and efficiency, and is compatible with all standard diagnostic systems and practice management programs.

In our Utility Equipment category, we have expanded our AirStar® air compressor line with the addition of our new AirStar 100 that can support up to 14 users and uses a 3-phase voltage supply for maximum energy efficiency. This new model, as well as our entire AirStar series, has been engineered with exclusive Membrane Dryer Technology: air is quadruple filtered to ensure it is cleaner and drier than ever before.

In our Monarch® product portfolio, we have listened to your requests and will be offering smaller (6" x 6.75") surface disinfectant wipes and a new 84.5 oz. enzymatic cleaner. We are also introducing our new vinyl upholstery cleaner this year as we continue to improve a line of products that help you take better care of your patients, your team and your equipment.

We greatly appreciate our dealer partners and dental professionals as you continue to rely on Air Techniques as a source for your digital imaging, equipment and merchandise needs. Air Techniques is committed to supporting the dental community and organizations that help improve the standard of care. Together, we will make a positive difference.

Thank you for your continued support and trust in Air Techniques.

Christoph Roeer
CEO

AIR TECHNIQUES equipped for life®

Table of Contents

Mission / Discontinued Parts **2**
Warranty and Return Policy **3**
Replacement Parts Exchange Policy **5**
Rebuilt Parts Exchange Policy / Warranty for Parts **5**
Air Compressors **6-53**
AirStar® NEO with Membrane Dryer, AS10 NEO to AS70 NEO 6-19
AirStar® with Membrane Dryer, AS10 to AS100 20-39
AirStar® Accessories 39
AirStar® with Desiccant Dryer, AS10 to AS70 40-51
Air Compressor Head Assembly 52-53
Vacuums **54-77**
Mojave® Dry Vacuum 54-55
VacStar® NEO, VS20 NEO & VS40 NEO 56-57
VacStar® NEO, VS50 NEO & VS80 NEO 58-59
VacStar® VS20 to VS80H Wet Vacuum 60-67
VacStar® Accessories 68-69
Discontinued STS Dry Vacuum Systems 70-72
Acadia® Amalgam Separator 73-74
Remote Control Panels and Water Systems 75-77
Film Processing **78-93**
A/T 2000® XR 78-83
A/T 2000® Plus 83-87
Accessories for A/T 2000 Plus & 2000 XR 87
Panoramic DLL for A/T 2000 Plus & 2000 XR 87
Peri-Pro® III 88-91
Peri-Pro® & Accessories for Peri-Pro® I & III 91
Daylight Loader & Duplicator / Daylight Loader - PPI, II, III 92
Main Transport Peri-Pro I & III 92-93
Intraoral X-Ray - ProVecta® HD **94-96**
Panoramic X-Ray - ProVecta® S-Pan **96-97**
Cephalometric X-Ray - ProVecta® S-Pan Ceph **97**
Digital Imaging **98-105**
ScanX® Digital Imaging System & Eraser 98-101
ScanX® Hot Swap/Repair Program 102
ScanX® Upgrade Loyalty Program 103
CamX® Triton HD 104
CamX® Elara 104
CamX® Luna HD Intraoral Camera 104
CamX® Polaris Intraoral Camera 104
CamX® Spectra Caries Detection Aid 105
Exchange Parts **106-107**
AirStar, AirStar NEO, Mojave, STS, VacStar, VacStar NEO, A/T 2000 Film Processors & ScanX 106-107

Air Techniques Company Mission

To develop and bring our customers the products they value. Our products are superior by invention, are professionally supported and provide years of lasting service to their users.

Air Techniques endorses and supports high quality and customer service as a company-wide way of life, focusing on managing the prevention of problems and the continuous improvement of our products to assure customer requirements are met.

Our success is achieved by empowering employees on every level to prevent defects (even where this might include the temporary stoppage of work or shipments) and improving and refining our processes and products.

Suggested Retail Prices are effective February 6, 2017.
This price list supersedes all other Parts Price Lists.
All prices are subject to change without notice.
Please see our website www.airtechniques.com for updates.

Discontinued Products and Parts

1. A/T 2000® Original Model 43000 manufactured from 1983-1994. Electronics Module P/N 43415X, Base PCB P/N 43420 and Electronics Module P/N 43400x are no longer available.
2. A-Series Compressor-Dri Air Compressors manufactured from 1972-1985. Replacement compressor heads are no longer available.
3 V-Series Compressor-Dri Air Compressors manufactured from 1985-1987. Replacement compressor heads are no longer available.
4. Turbo 2000 Dry Vacuum System manufactured from 1995-2001. Replacement pump assemblies are no longer available.
5. 70 Series Compressors manufactured from 1968-1998.
6. 50/50,000 Series Compressors manufactured from 1969-1999.
7. Dento Dri 3100R manufactured from 1962-1998.
8. Dento Dri 3300G manufactured from 1963-1986.
9. VistaCam.
10. Oil Type Compressor Parts
11. Original AirStar 1, 2-1, 2-2, 3, 5, 7 Heads
12. Vacstar 2, 4, 5, 8.
13. CAS 8-gallon PN 54300 Old Style.
14. 4-gallon CAS for Wet Suction Pumps. (Guardian Amalgam System). Limited replacement parts available.
15. 8-gallon CAS for Wet Suction Pumps. (Guardian Amalgam System). Limited replacement parts available.
16. Airdent.
18. SLC.
19. Acclaim Intraoral Camera. Limited replacement parts availability.
20. Non ILE ScanX Classic. Limited replacement parts available.
21. Non ILE ScanX Intraoral. Limited replacement parts available.
22. Provecta 70 Intraoral X-Ray manufactured until 2012. Limited replacement parts availability.
23. Spectra Caries Detection Aid (original D4000 system manufactured until 2012). Limited replacement parts availability.
24. Polaris Intraoral Camera (original D7000 system manufactured until 2012). Limited replacement parts availability.
25. STS–3/5/6/10/20 and Triple STS–5 manufactured until 2012. Limited replacement parts availability.
26. ARCLIGHT.
27. Guardian Amalgam Separator.

Warranty and Return Policy

Air Techniques' equipment is warranted to be free from defects in materials and workmanship from the date of installation for a period as follows:

Product	Full System	Specific Components
ScanX	**24 months**	**Phospher Storage Plates 30 Days**
ProVecta S-Pan **ProVecta S-Pan Ceph**	**24 months**	**n/a**
ProVecta HD	**24 months**	**n/a**
CamX Cameras	**24 months**	**n/a**
A/T2000 XR	**24 months**	**n/a**
Peri-Pro	**24 months**	**n/a**
AirStar / AirStar NEO	**24 months** **or** **2,000 hours**	**60 months or 5,000 hours (whichever comes first): all compressor heads, motors, PCBs and membrane dryers***
VacStar / VacStar NEO	**24 months**	**60 months: all pumps and motors**
Mojave	**60 months**	**n/a**
Hydromiser	**24 months**	**n/a**
Acadia	**24 months**	**n/a**

**For eligibility customer must provide confirmation in the form of a dealer invoice to the dentist that preventative maintenance kit or coalescent filter was installed on the unit within two thousand (2,000) hours or latest after twenty four (24) months of failure (whichever comes first). (P/Ns 87351 – 87355 & 87367).*

All part and component returns and replacement equipment require a Return Materials Authorization (RMA). Returns must be received within three months of the RMA issue date and in appropriate packaging to prevent shipping damage. In case of advanced replacement, products shall be returned in the original packaging. Items returned without an RMA, or included with other products for which an RMA has been issued, will be returned to the customer at the discretion of Air Techniques, Inc.; the return shipping is the customer's responsibility.

Any item returned under warranty, will be repaired or replaced at our option at no charge provided that our inspection confirms it to be defective. Air Techniques, Inc. is not liable for indirect or consequential damages or loss of any nature in connection with this equipment. Dealer labor, shipping and handling charges are not covered by this warranty.

Warranty credit will not be applied to product returns that exhibit damage due to shipping, misuse, careless handling, and improper installation by dealers, or repairs by unauthorized personnel. Credit, or partial credit, will not be issued until products/parts have been received and assessed. If, after the evaluation it is determined that there is no-fault found and the unit is working properly, a credit will not be issued. Warranty is void if product is installed incorrectly or installed or serviced by anyone other than an authorized Air Techniques' dealer or service personnel.

This warranty is in lieu of all other warranties expressed or implied. No representative or person is authorized to assume for us any liability in connection with the sale of our equipment.

Online Warranty Registration

Quickly and easily register your new Air Techniques product online. Just have your product model and serial numbers available. Then go to the Air Techniques' website, www.airtechniques.com, click the Warranty Registration link and complete the registration form. This on-line registration ensures a record for the warranty period and helps Air Techniques keep you informed of product updates and other valuable information.

Non Warranty Parts, Accessories & Merchandise (Monarch)

Items must be new, unused, and factory sealed in original packaging. Credit will not be applied to product returns that exhibit damage due to shipping, misuse, or careless handling. Credit, or partial credit, will not be issued until products/parts have been received and verified that the tamper-proof seal is intact. Products cannot be returned after 6 months from original invoice date. A 15% restocking fee will be charged for all products returned to cover inspection and repackaging.

Contact Information

For general and immediate questions, please call:

Toll Free in the US and Canada: 1 – 800-AIR TECH (247-8324)
Monday through Friday, 8:00am – 7:00pm (EST)

Disclaimer

1. Advanced replacement will be provided and invoiced at full price.
2. For Shipped Items – All freight costs are paid for by dealers, unless part of an approved promotion/program. All shipping damage is to be claimed through the carrier or dealer.
3. For all non-warranty orders, there is a $75.00 minimum order value for US dealers and $150.00 for non US dealers.

Replacement Parts Exchange Policy

Replacement parts are available on an "exchange basis" for some Air Techniques equipment. Parts available on this basis are listed in this price list. Replacement "exchange" parts may be ordered in either of two ways:

Advance Replacement

1. Order the replacement part needed.
2. The part is shipped and invoiced at the "outright sale price".
3. Return the old part (freight prepaid) to the factory, after obtaining an RMA number. See page 3.
4. Credit is issued for the difference between the "outright sale price" and the "exchange price".

Direct Exchange

1. Return the old part (freight prepaid) to the factory, after obtaining an RMA. See previous page.
2. Request that the part be replaced.
3. The replacement part is shipped (freight collect).
4. The "exchange price" is invoiced.

Rebuilt Parts Exchange Policy

Rebuilt parts are available on an "exchange basis" for some Air Techniques equipment. Parts available on this basis are listed in this price list. Rebuilt "exchange" parts may be ordered in either of two ways:

Advance Replacement

1. Order the rebuilt part needed.
2. The part is shipped and invoiced at the "outright sale price".
3. Return the old part (freight prepaid) to the factory, after obtaining an Return Authorization (RMA) number. See page 3.
4. Credit is issued for the difference between the "outright sale price" and the "exchange price".

Direct Exchange

1. Return the old part (freight prepaid) to the factory, after obtaining an Return Authorization (RMA) number. See page 3.
2. Request that the part be replaced with a rebuilt part.
3. The rebuilt part is shipped (freight collect).
4. The "exchange price" is invoiced.

Warranty for Parts

Air Techniques parts are warranted to be free from defects in material and workmanship from the date of installation for a period of:

Replacement Mojave Motors	**12 month limited warranty**
Replacement Compressor Heads, Oil-less	**12 month limited warranty**
Replacement VacStar Pumps	**12 month limited warranty**
STS Replacement Motors	**12 month limited warranty**
Refurbished VacStar Pumps	**12 month limited warranty**
AirDent II and AirDent II CS	**6 month limited warranty**
Rebuilt A/T 2000, Plus & XR Exchange Parts	**6 month limited warranty**
Peri-Pro Transports	**6 month limited warranty**
ScanX, ScanX Intraoral	**6 month limited warranty**
ProVecta Intraoral X-Ray	**6 month limited warranty**
All Other Parts	**3 month limited warranty**

Any item returned to our factory in Melville, New York, through Air Techniques' authorized Dealer, will be repaired or replaced at our option at no charge provided that our inspection shall indicate it to have been defective. Dealer labor, shipping and handling charges are not covered by this warranty.

This warranty does not apply to damage due to shipping, misuse, careless handling or repairs by other than authorized service personnel. Warranty void if installed or serviced by other than authorized Air Techniques' Dealer service personnel.

Air Techniques, Inc. is not liable for indirect or consequential damage or loss of any nature in connection with this equipment. This warranty is in lieu of all other warranties expressed or implied. No representitive or person is authorized to assume for us any liability in connection with the sale of our equipment.

AirStar® 10 NEO with Membrane Dryer Parts Breakdown

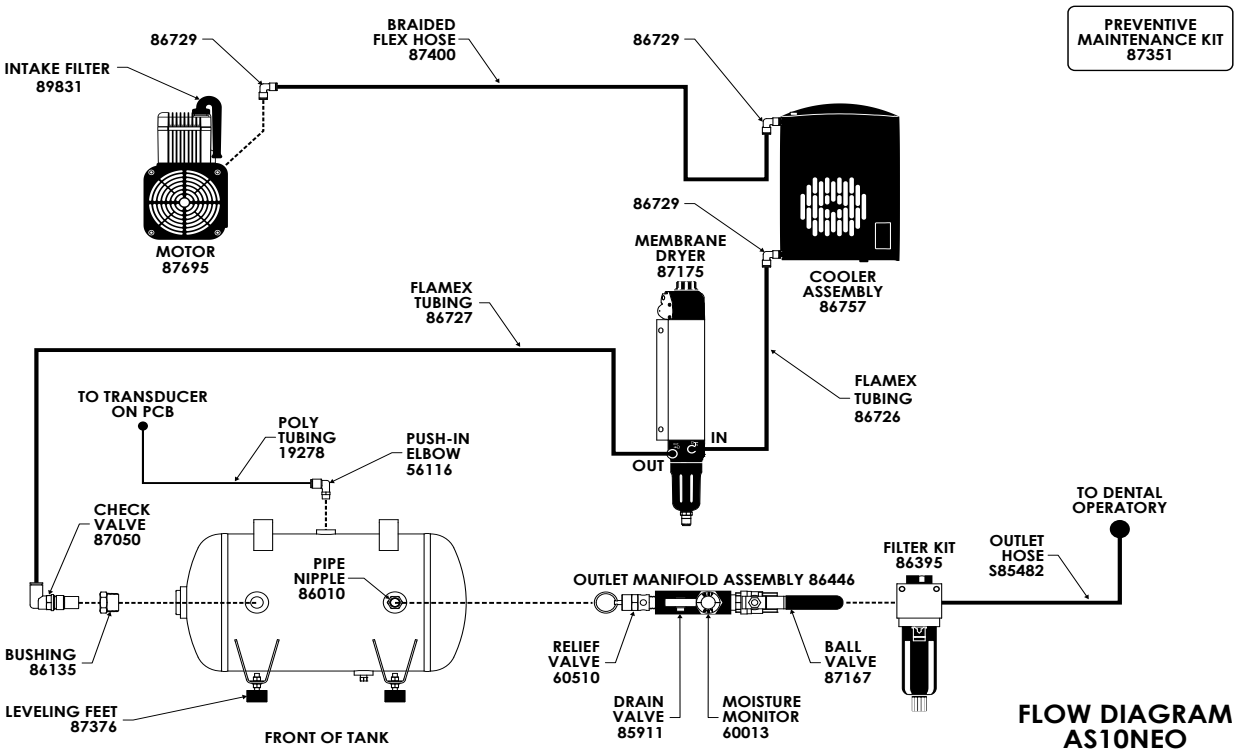

*Drain Valve and Moisture Monitor sold separately

AirStar 10 NEO with Membrane Dryer Electrical Components Parts Breakdown

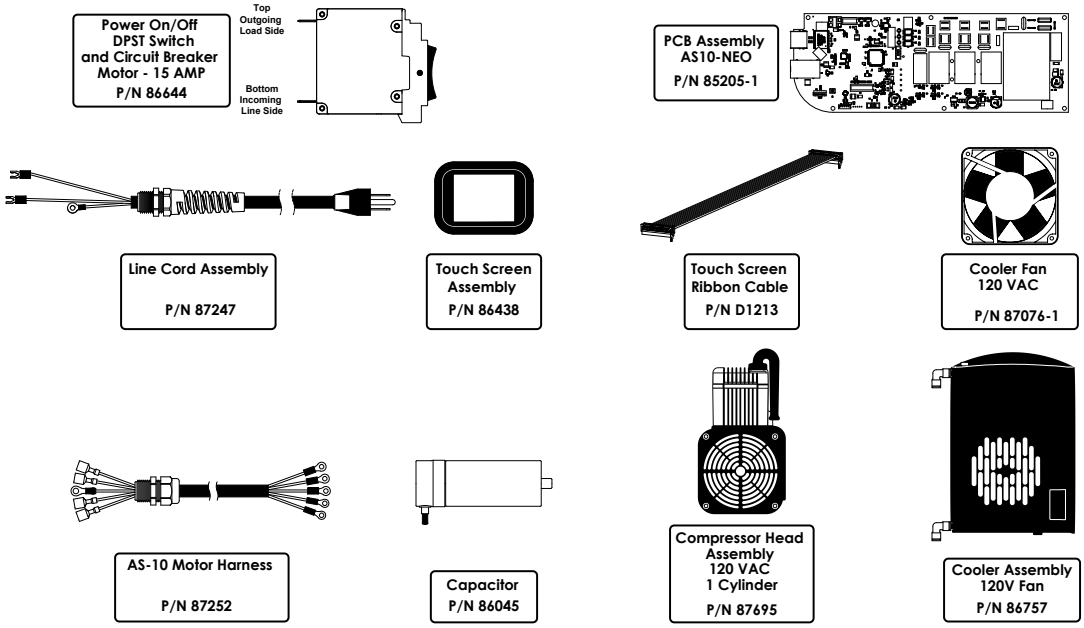

NEO Air Compressors with Membrane Dryer

Part Number	Description	Price
AirStar® AS10 NEO Parts Breakdown		
87167	Ball Valve; 3/8" NPT	$ 30.90
87400	Braided Hose; 10mm Push, 7-1/4" Overall Length	$ 87.55
86135	Bushing; 3/4" MNPT x 1/2" FBSPP	$ 17.51
87050	Main Tank Check Valve, Swivel Elbow	$ 45.32
86757	Cooler Assembly	$ 490.35
85911	Drain Valve Assembly	$ 42.18
56116	Elbow; 1/8" MNPT x 5/32 Push	$ 6.18
86729	Elbow; 10mm Push	$ 18.39
86395	Tank Outlet 5 Micron Filter & Delivery Hose Replacement Kit, 3/8" NPT	$ 259.00
87168	Tank Outlet 5 Micron Filter, Replacement Filter Assembly Only, 3/8" NPT	$ 45.00
S85482	Hook-Up Hose Kit; 6' Length, 3/8" MNPT	$ 50.83
89831	Air Intake Filter Replacement: 1 P/Cylinder for all Airstar Solutions	$ 75.00
87376	Rubber Leveling Foot (4 per Compressor)	$ 97.00
87175	Kit; Replacement Membrane Dryer	$ 1,136.69
87108	Membrane Dryer; Drain Tube and Drip Tray Kit	$ 55.16
60013	Moisture Monitor Assembly	$ 32.45
86010	Nipple, Tank to Outlet Manifold	$ 30.90
86446	Outlet Manifold Assembly*	$ 107.12
60510	Safety Relief Valve; 140 PSI	$ 72.46
19278	Tubing; 5/32" OD, Clear	$ 3.09
86726	Tubing; Cooler to Membrane Dryer	$ 29.20
86727	Tubing; Membrane Dryer to Tank	$ 33.53
Electrical Breakdown		
86045	Capacitor, 100 µF, 280 VAC	$ 78.28
86644	Power On/Off Switch and Circuit Breaker 15 AMP, AS NEO 10/40 VS40NEO	$ 91.67
87695	Compressor Head Assembly for AirStar 10 NEO	$ 3,435.00
87076-1	Cooler Assembly; 115 V Fan	$ 32.21
87247	Line Cord Assembly, 115 VAC, 5-15P	$ 78.28
87252	Motor Harness, AS NEO 10/21/22/30	$ 44.81
85205-1	PCB Replacement Kit AS10 NEO	$ 1,317.37
86438	Touch Screen Assembly	$ 175.00
D1213	Touch Screen Ribbon Cable	$ 17.85
Additional Items		
87263	Airstar Neo Accessory Kit; AS10, 21, 22, 30, 40, 50	$ 271.92
85003	Airstar Motor & Dryer Bypass Kit	$ 20.00
87351	Preventive Maintenance Kit for AS10/ AS10 NEO & AS12	$ 109.00
85491	Remote Air Intake Kit, AS10 / AS10 NEO, AS12	$ 369.00
60046	Tubing; 1/2" ID, Clear	$ 8.65
80184	Vibration Pad Kit (pkg/4)	$ 53.55
87477	Tandem Kit	$ 00.00
87472	Firmware Upgrade Kit	$ 00.00

AirStar® 21 NEO with Membrane Dryer Parts Breakdown

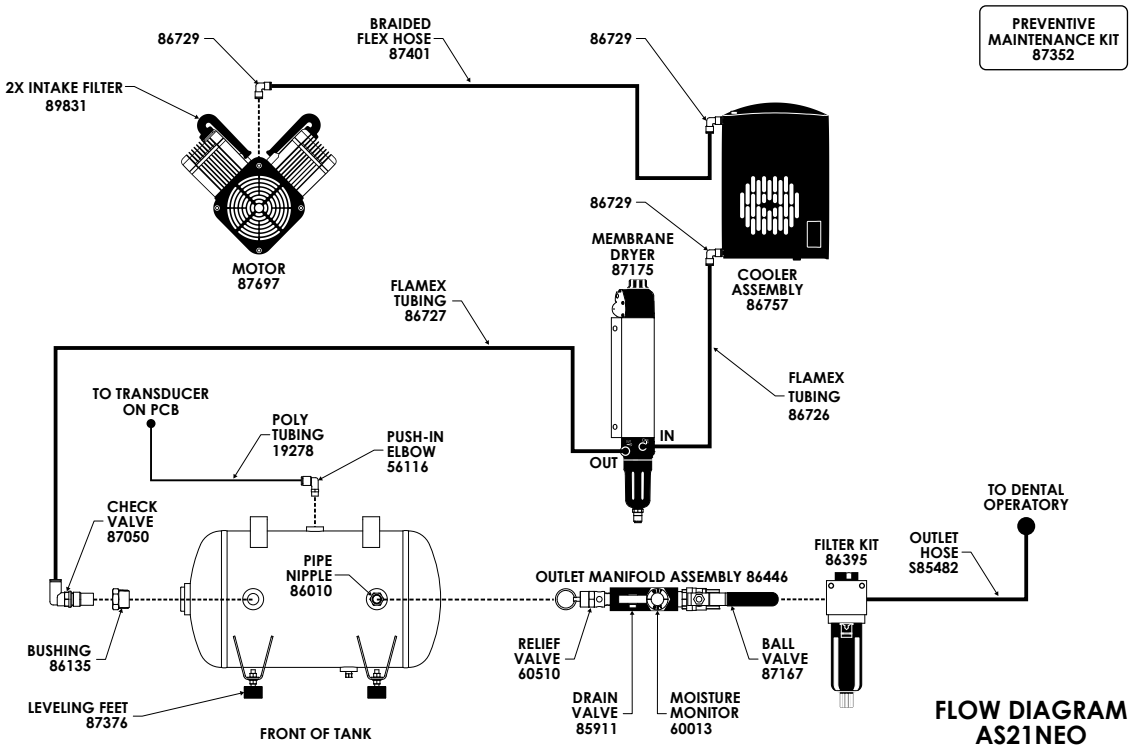

*Drain Valve and Moisture Monitor sold separately

AirStar 21 NEO with Membrane Dryer Electrical Components Parts Breakdown

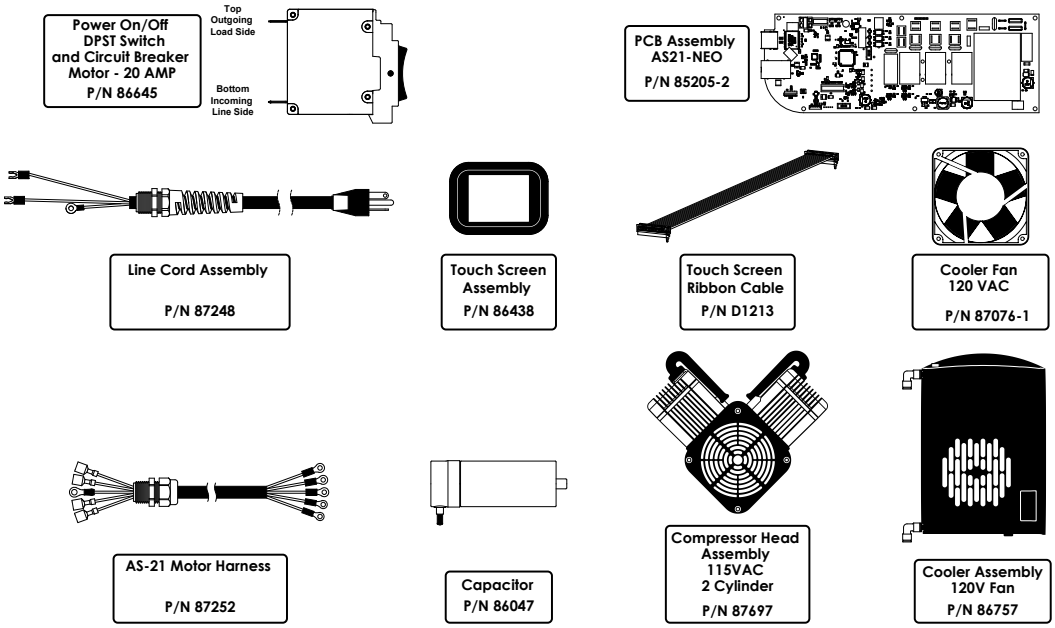

NEO Air Compressors with Membrane Dryer

Part Number	Description		Price
AirStar® AS21 NEO Parts Breakdown			
87167	Ball Valve; 3/8" NPT	$	30.90
87401	Braided Hose; 10mm Push, 8-1/4" Overall Length	$	88.00
86135	Bushing; 3/4" MNPT x 1/2" FBSPP	$	17.51
87050	Main Tank Check Valve, Swivel Elbow	$	45.32
86757	Cooler Assembly	$	490.35
85911	Drain Valve Assembly	$	42.18
56116	Elbow; 1/8" MNPT x 5/32 Push	$	6.18
86729	Elbow; 10mm Push	$	18.39
86395	Tank Outlet 5 Micron Filter & Delivery Hose Replacement Kit, 3/8" NPT	$	259.00
87168	Tank Outlet 5 Micron Filter, Replacement Filter Assembly Only, 3/8" NPT	$	45.00
S85482	Hook-Up Hose Kit; 6' Length, 3/8" MNPT	$	50.83
89831	Air Intake Filter Replacement: 1 P/Cylinder for all Airstar Solutions	$	75.00
87376	Rubber Leveling Foot (4 per Compressor)	$	97.00
87175	Kit; Replacement Membrane Dryer	$	1,136.69
87108	Membrane Dryer; Drain Tube and Drip Tray Kit	$	55.16
60013	Moisture Monitor Assembly	$	32.45
86010	Nipple, Tank to Outlet Manifold	$	30.90
86446	Outlet Manifold Assembly*	$	107.12
60510	Safety Relief Valve; 140 PSI	$	72.46
19278	Tubing; 5/32" OD, Clear	$	3.09
86726	Tubing; Cooler to Membrane Dryer	$	29.20
86727	Tubing; Membrane Dryer to Tank	$	33.53
Electrical Breakdown			
86047	Capacitor, 160 uF, 320 VAC	$	78.28
86645	Power On/Off Switch and Circuit Breaker 20 AMP, AS NEO 21/50	$	91.67
87697	Compressor Head Assembly; AirStar 21 NEO, 2 Cyl, 120 VAC	$	4,425.00
87076-1	Cooler Assembly; 115 V Fan	$	32.21
87248	Line Cord Assembly, 115 VAC, 5-20P	$	78.28
87252	Motor Harness, AS NEO 10/21/22/30	$	44.81
85205-2	PCB Replacement Kit AS21 NEO	$	1,317.37
86438	Touch Screen Assembly	$	175.00
D1213	Touch Screen Ribbon Cable	$	17.85
Additional Items			
87263	Airstar Neo Accessory Kit; AS10, 21, 22, 30, 40, 50	$	271.92
85003	Airstar Motor & Dryer Bypass Kit	$	20.00
87352	Preventive Maintenance Kit for AS21/ AS21 NEO, AS22 / AS22 NEO & AS30 / AS30 NEO	$	179.00
85492	Remote Air Intake Kit, AS21 / AS21 NEO, AS22 / AS22 NEO, AS30 / AS30 NEO	$	389.00
60046	Tubing; 1/2" ID, Clear	$	8.65
80184	Vibration Pad Kit (pkg/4)	$	53.55
87477	Tandem Kit	$	00.00
87472	Firmware Upgrade Kit	$	00.00

AirStar® 22 NEO with Membrane Dryer Parts Breakdown

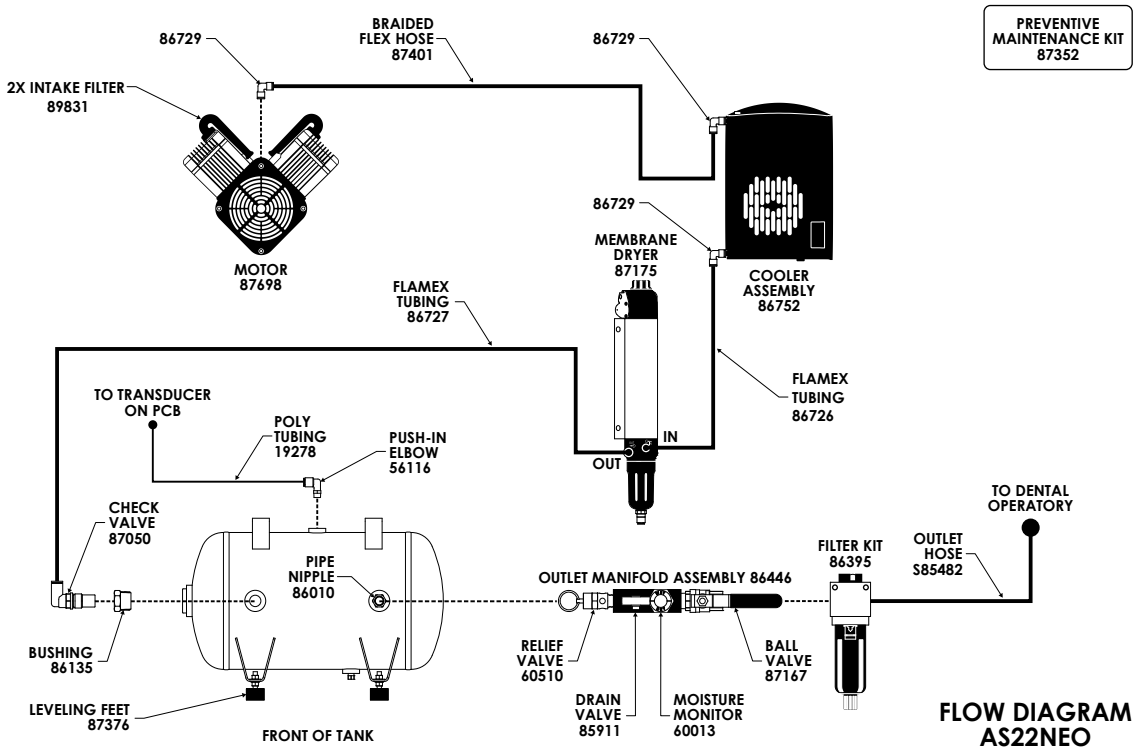

*Drain Valve and Moisture Monitor sold separately

AirStar 22 NEO with Membrane Dryer Electrical Components Parts Breakdown

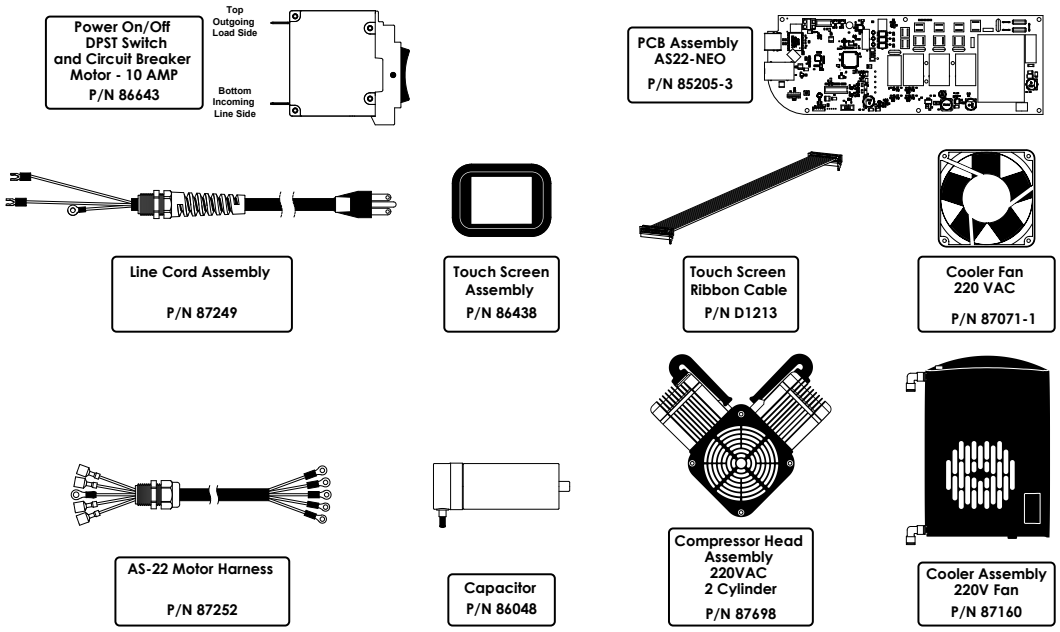

NEO Air Compressors with Membrane Dryer

Part Number	Description		Price
AirStar® AS22 NEO Parts Breakdown			
87167	Ball Valve; 3/8" NPT	$	30.90
87401	Braided Hose; 10mm Push, 8-1/4" Overall Length	$	88.00
86135	Bushing; 3/4" MNPT x 1/2" FBSPP	$	17.51
87050	Main Tank Check Valve, Swivel Elbow	$	45.32
86752	Cooler Assembly	$	254.10
85911	Drain Valve Assembly	$	42.18
56116	Elbow; 1/8" MNPT x 5/32 Push	$	6.18
86729	Elbow; 10mm Push	$	18.39
86395	Tank Outlet 5 Micron Filter & Delivery Hose Replacement Kit, 3/8" NPT	$	259.00
87168	Tank Outlet 5 Micron Filter, Replacement Filter Assembly Only, 3/8" NPT	$	45.00
S85482	Hook-Up Hose Kit; 6' Length, 3/8" MNPT	$	50.83
89831	Air Intake Filter Replacement: 1 P/Cylinder for all Airstar Solutions	$	75.00
87376	Rubber Leveling Foot (4 per Compressor)	$	97.00
87175	Kit; Replacement Membrane Dryer	$	1,136.69
87108	Membrane Dryer; Drain Tube and Drip Tray Kit	$	55.16
60013	Moisture Monitor Assembly	$	32.45
86010	Nipple, Tank to Outlet Manifold	$	30.90
86446	Outlet Manifold Assembly*	$	107.12
60510	Safety Relief Valve; 140 PSI	$	72.46
19278	Tubing; 5/32" OD, Clear	$	3.09
86726	Tubing; Cooler to Membrane Dryer	$	29.20
86727	Tubing; Membrane Dryer to Tank	$	33.53
Electrical Breakdown			
86048	Capacitor, 50 µF, 450 VAC	$	66.95
86643	Power On/Off Switch and Circuit Breaker 10 AMP, AS NEO 22/30 VS20NEO	$	91.67
87698	Compressor Head Assembly for AirStar 22/40/50/70 NEO	$	4,425.00
87071-1	Cooler Assembly; 230V Fan	$	36.77
87249	Line Cord Assembly, 230 VAC, 6-15P	$	67.98
87252	Motor Harness, AS NEO 10/21/22/30	$	44.81
85205-3	PCB Replacement Kit AS22 NEO	$	1,317.37
86438	Touch Screen Assembly	$	175.00
D1213	Touch Screen Ribbon Cable	$	17.85
Additional Items			
87263	Airstar Neo Accessory Kit; AS10, 21, 22, 30, 40, 50	$	271.92
85003	Airstar Motor & Dryer Bypass Kit	$	20.00
87352	Preventive Maintenance Kit for AS21/ AS21 NEO, AS22 / AS22 NEO & AS30 / AS30 NEO	$	179.00
85492	Remote Air Intake Kit, AS21 / AS21 NEO, AS22 / AS22 NEO, AS30 / AS30 NEO	$	389.00
67002	Buck/ Boost Transformer, 3.9 kVa	$	819.20
60046	Tubing; 1/2" ID, Clear	$	8.65
80184	Vibration Pad Kit (pkg/4)	$	53.55
87477	Tandem Kit	$	00.00
87472	Firmware Upgrade Kit	$	00.00

AirStar® 30 NEO with Membrane Dryer Parts Breakdown

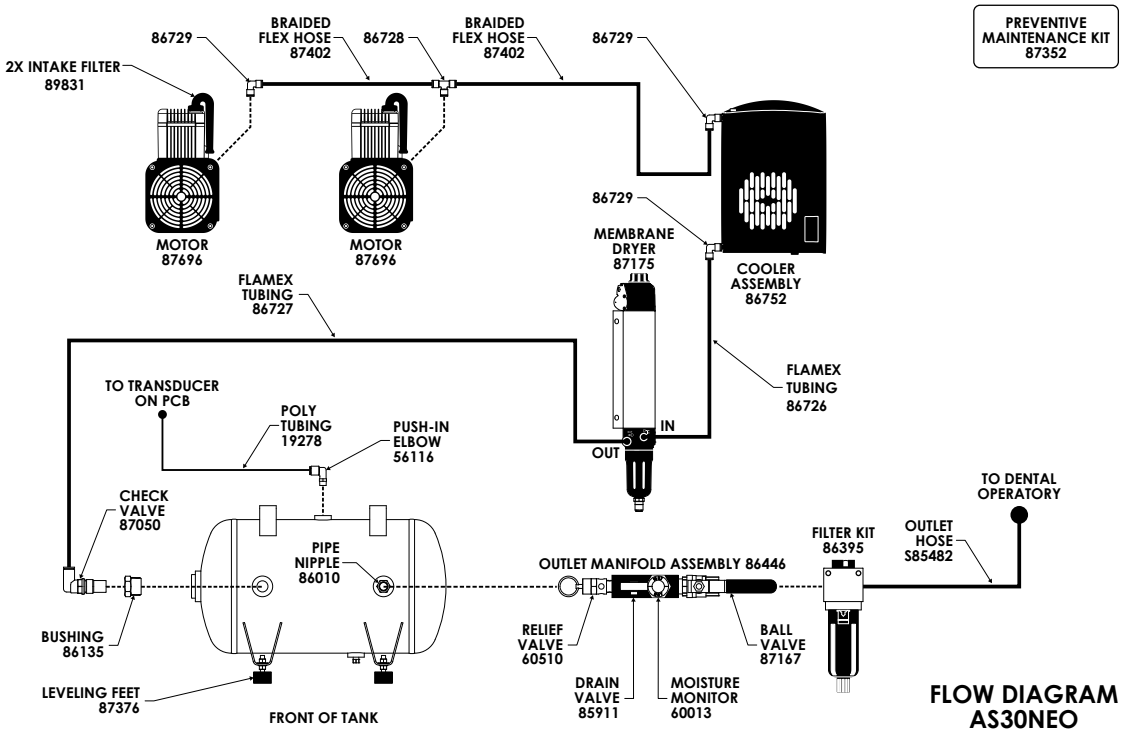

*Drain Valve and Moisture Monitor sold separately

AirStar 30 NEO with Membrane Dryer Electrical Components Parts Breakdown

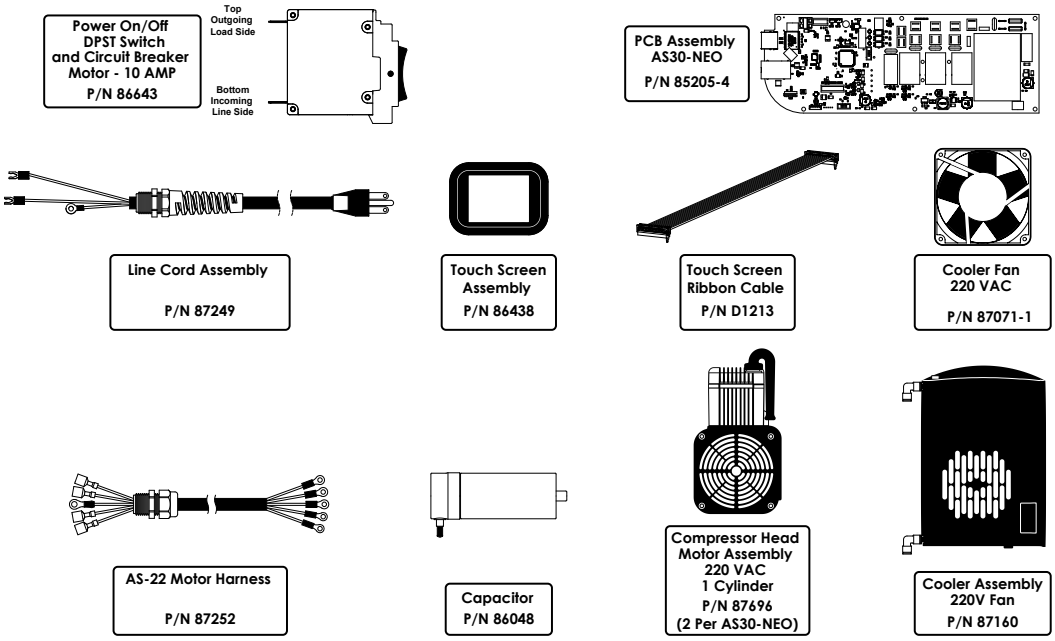

NEO Air Compressors with Membrane Dryer

Part Number	Description		Price
AirStar® AS30 NEO Parts Breakdown			
87167	Ball Valve; 3/8" NPT	$	30.90
87402	Braided Hose; 10mm Push, 9-1/4" Overall Length	$	107.00
86135	Bushing; 3/4" MNPT x 1/2" FBSPP	$	17.51
87050	Main Tank Check Valve, Swivel Elbow	$	45.32
86752	Cooler Assembly	$	254.10
85911	Drain Valve Assembly	$	42.18
56116	Elbow; 1/8" MNPT x 5/32 Push	$	6.18
86729	Elbow; 10mm Push	$	18.39
86395	Tank Outlet 5 Micron Filter & Delivery Hose Replacement Kit, 3/8" NPT	$	259.00
87168	Tank Outlet 5 Micron Filter, Replacement Filter Assembly Only, 3/8" NPT	$	45.00
S85482	Hook-Up Hose Kit; 6' Length, 3/8" MNPT	$	50.83
89831	Air Intake Filter Replacement: 1 P/Cylinder for all Airstar Solutions	$	75.00
87376	Rubber Leveling Foot (4 per Compressor)	$	97.00
87175	Kit; Replacement Membrane Dryer	$	1,136.69
87108	Membrane Dryer; Drain Tube and Drip Tray Kit	$	55.16
60013	Moisture Monitor Assembly	$	32.45
85028	Motor Disconnect Plug	$	3.50
86010	Nipple, Tank to Outlet Manifold	$	30.90
86446	Outlet Manifold Assembly*	$	107.12
60510	Safety Relief Valve; 140 PSI	$	72.46
86728	Tee; 10mm Push	$	10.82
19278	Tubing; 5/32" OD, Clear	$	3.09
86726	Tubing; Cooler to Membrane Dryer	$	29.20
86727	Tubing; Membrane Dryer to Tank	$	33.53
Electrical Breakdown			
86046	Capacitor, 25 µF, 450 VAC	$	33.99
86643	Power On/Off Switch and Circuit Breaker 10 AMP, AS NEO 22/30 VS20NEO	$	91.67
87696	Compressor Head Assembly; AirStar 30/40 NEO, 1 Cyl, 220 VAC	$	3,435.00
87071-1	Cooler Assembly; 230V Fan	$	36.77
87249	Line Cord Assembly, 230 VAC, 6-15P	$	67.98
87252	Motor Harness, AS NEO 10/21/22/30	$	44.81
87253	Motor Harness, AS NEO 30/50/70	$	43.78
85205-4	PCB Replacement Kit AS30 NEO	$	1,317.37
86438	Touch Screen Assembly	$	175.00
D1213	Touch Screen Ribbon Cable	$	17.85
Additional Items			
87263	Airstar Neo Accessory Kit; AS10, 21, 22, 30, 40, 50	$	271.92
85003	Airstar Motor & Dryer Bypass Kit	$	20.00
87352	Preventive Maintenance Kit for AS21/ AS21 NEO, AS22 / AS22 NEO & AS30 / AS30 NEO	$	179.00
85492	Remote Air Intake Kit, AS21 / AS21 NEO, AS22 / AS22 NEO, AS30 / AS30 NEO	$	389.00
67002	Buck/ Boost Transformer, 3.9 kVa	$	819.00
60046	Tubing; 1/2" ID, Clear	$	8.65
80184	Vibration Pad Kit (pkg/4)	$	53.55
87477	Tandem Kit	$	00.00
87472	Firmware Upgrade Kit	$	00.00

AirStar® 40 NEO with Membrane Dryer Parts Breakdown

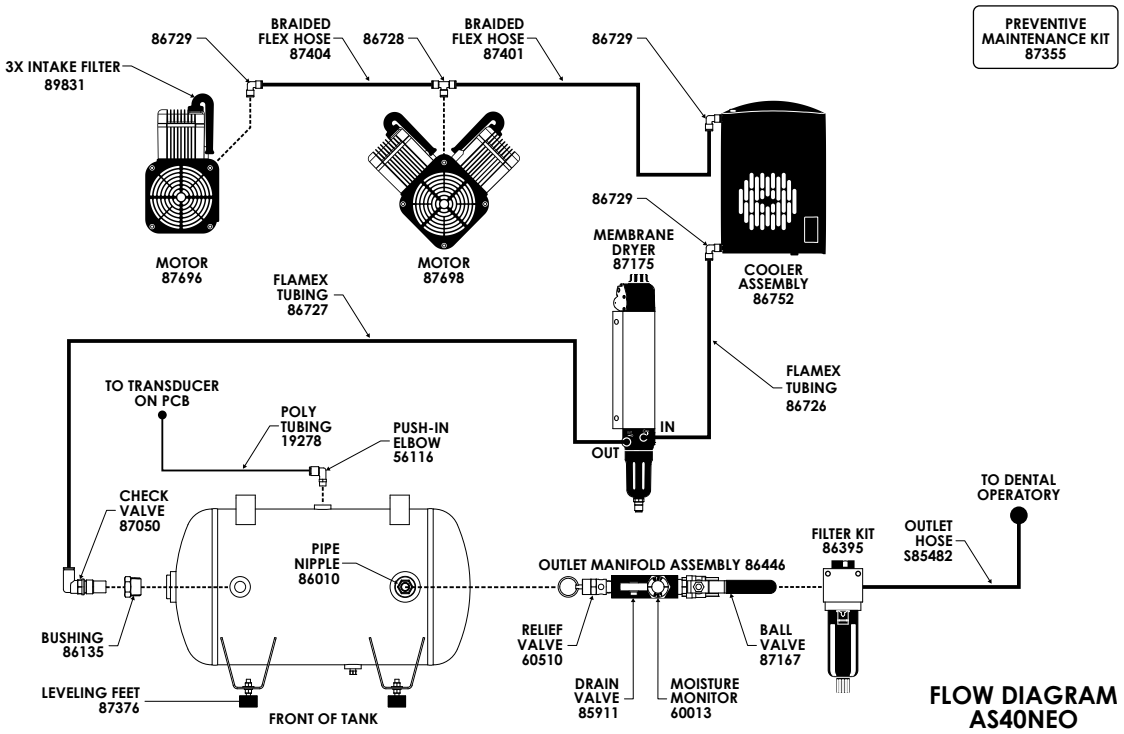

*Drain Valve and Moisture Monitor sold separately

AirStar 40 NEO with Membrane Dryer Electrical Components Parts Breakdown

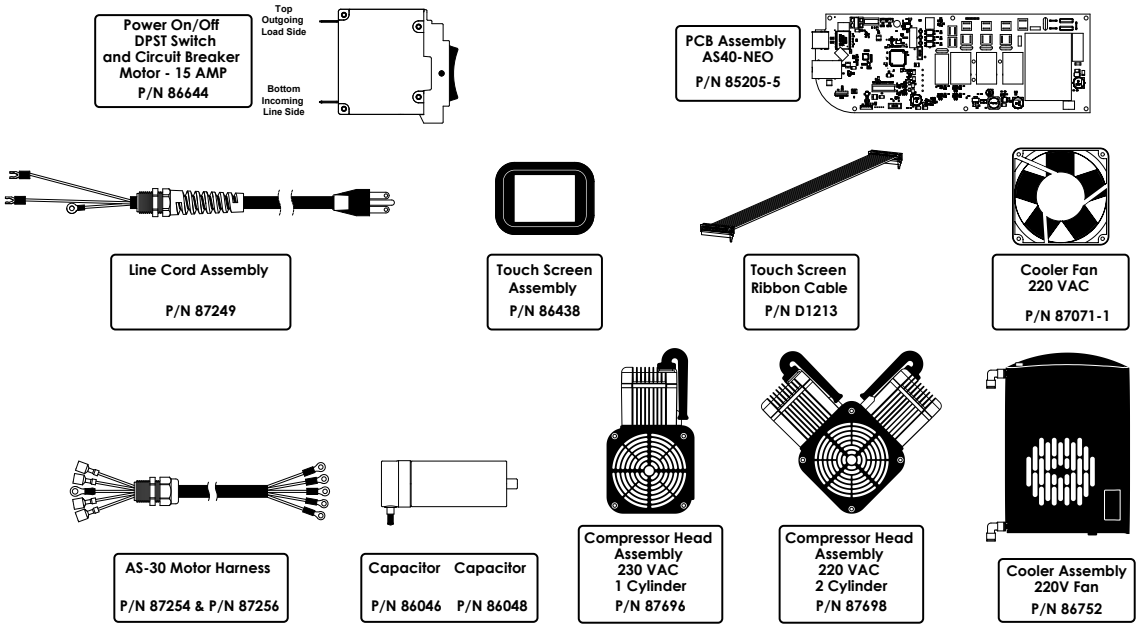

NEO Air Compressors with Membrane Dryer

Part Number	Description		Price
AirStar® AS40 NEO Parts Breakdown			
87167	Ball Valve; 3/8" NPT	$	30.90
87404	Hose Assenbly; Airstar, Braided Overall Length 14-1/4	$	74.00
87401	Braided Hose; 10mm Push, 8-1/4" Overall Length	$	88.00
86135	Bushing; 3/4" MNPT x 1/2" FBSPP	$	17.51
87050	Main Tank Check Valve, Swivel Elbow	$	45.32
86752	Cooler Assembly	$	254.10
85911	Drain Valve Assembly	$	42.18
56116	Elbow; 1/8" MNPT x 5/32 Push	$	6.18
86729	Elbow; 10mm Push	$	18.39
86395	Tank Outlet 5 Micron Filter & Delivery Hose Replacement Kit, 3/8" NPT	$	259.00
87168	Tank Outlet 5 Micron Filter, Replacement Filter Assembly Only, 3/8" NPT	$	45.00
S85482	Hook-Up Hose Kit; 6' Length, 3/8" MNPT	$	50.83
89831	Air Intake Filter Replacement: 1 P/Cylinder for all Airstar Solutions	$	75.00
87376	Rubber Leveling Foot (4 per Compressor)	$	97.00
87175	Membrane Dryer	$	1,136.69
87108	Membrane Dryer; Drain Tube and Drip Tray Kit	$	55.16
60013	Moisture Monitor Assembly	$	32.45
85028	Motor Disconnect Plug	$	3.50
86010	Nipple, Tank to Outlet Manifold	$	30.90
86446	Outlet Manifold Assembly*	$	107.12
60510	Safety Relief Valve; 140 PSI	$	72.46
86728	Tee; 10mm Push	$	10.82
19278	Tubing; 5/32" OD, Clear	$	3.09
86726	Tubing; Cooler to Membrane Dryer	$	29.20
86727	Tubing; Membrane Dryer to Tank	$	33.53
Electrical Breakdown			
86046	Capacitor, 25 µF, 450 VAC	$	33.99
86048	Capacitor, 50 µF, 450 VAC	$	66.95
86644	Power On/Off Switch and Circuit Breaker 15 AMP, AS NEO 10/40 VS40NEO	$	91.67
87696	Compressor Head Assembly; AirStar 30/40 NEO, 1 Cyl, 220 VAC	$	3,435.00
87698	Compressor Head Assembly for AirStar 22/40/50/70 NEO	$	4,425.00
87071-1	Cooler Assembly; 230V Fan	$	36.77
87249	Line Cord Assembly, 230 VAC, 6-15P	$	67.98
87254	Motor Harness, AS NEO 40/50/70	$	42.23
87256	Motor Harness, AS NEO 40	$	47.90
85205-5	PCB Replacement Kit AS40 NEO	$	1,317.37
86438	Touch Screen Assembly	$	175.00
D1213	Touch Screen Ribbon Cable	$	17.85
Additional Items			
87263	Airstar Neo Accessory Kit; AS10, 21, 22, 30, 40, 50	$	271.92
85003	Airstar Motor & Dryer Bypass Kit	$	20.00
87355	Preventive Maintenance Kit for AS40 & AS40 NEO	$	249.00
87361	Remote Air Intake Kit, AS40 / AS40 NEO	$	393.75
67002	Buck/ Boost Transformer, 3.9 kVa	$	819.00
60046	Tubing; 1/2" ID, Clear	$	8.65
80184	Vibration Pad Kit (pkg/4)	$	53.55
87477	Tandem Kit	$	00.00
87472	Firmware Upgrade Kit	$	00.00

AirStar® 50 NEO with Membrane Dryer Parts Breakdown

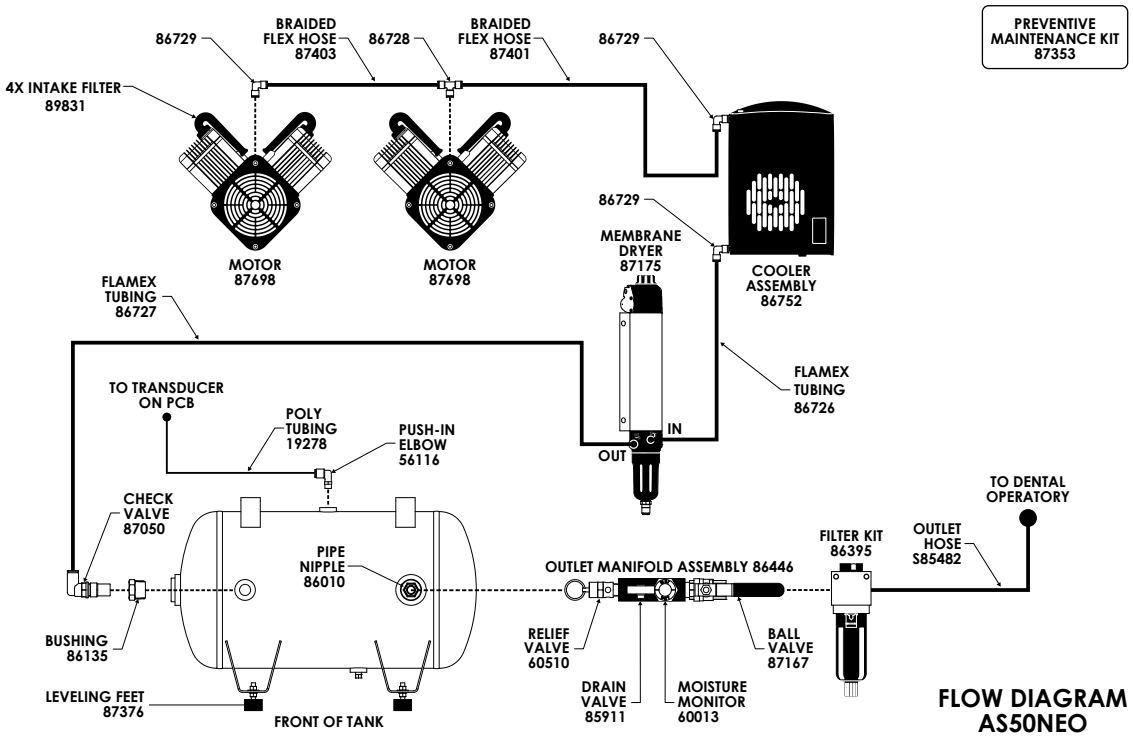

*Drain Valve and Moisture Monitor sold separately

AirStar 50 NEO with Membrane Dryer Electrical Components Parts Breakdown

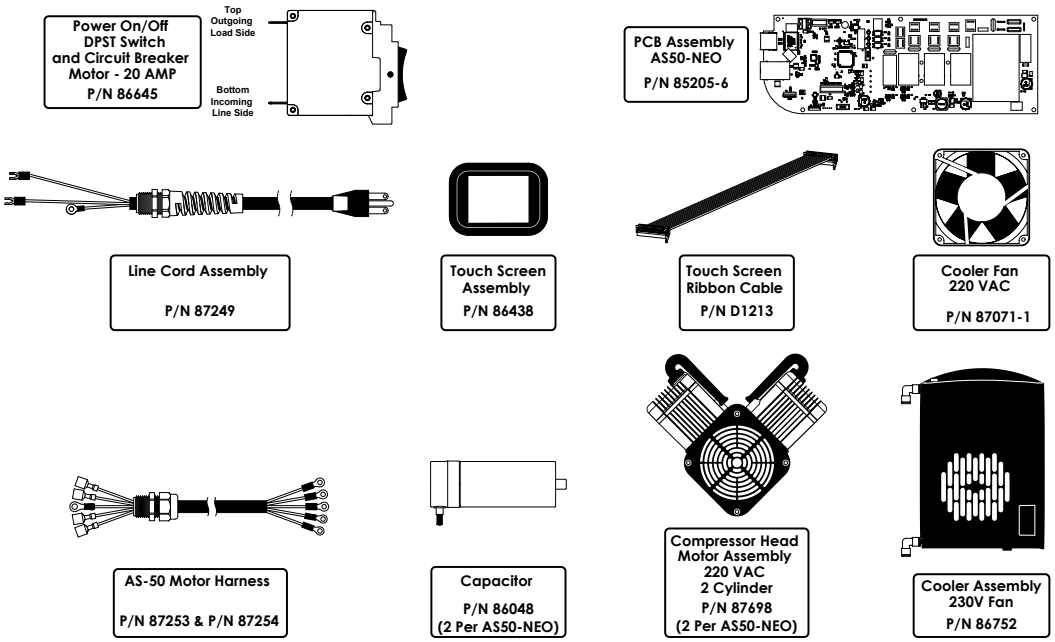

NEO Air Compressors with Membrane Dryer

Part Number	Description		Price
AirStar® AS50 NEO Parts Breakdown			
87167	Ball Valve; 3/8" NPT	$	30.90
87403	Braided Hose; 10mm Push, 11-1/4" Overall Length	$	72.50
87401	Braided Hose; 10mm Push, 8-1/4" Overall Length	$	88.00
86135	Bushing; 3/4" MNPT x 1/2" FBSPP	$	17.51
87050	Main Tank Check Valve, Swivel Elbow	$	45.32
86752	Cooler Assembly	$	254.10
85911	Drain Valve Assembly	$	42.18
56116	Elbow; 1/8" MNPT x 5/32 Push	$	6.18
86729	Elbow; 10mm Push	$	18.39
86395	Tank Outlet 5 Micron Filter & Delivery Hose Replacement Kit, 3/8" NPT	$	259.00
87168	Tank Outlet 5 Micron Filter, Replacement Filter Assembly Only, 3/8" NPT	$	45.00
S85482	Hook-Up Hose Kit; 6' Length, 3/8" MNPT	$	50.83
89831	Air Intake Filter Replacement: 1 P/Cylinder for all Airstar Solutions	$	75.00
87376	Rubber Leveling Foot (4 per Compressor)	$	97.00
87175	Kit; Replacement Membrane Dryer	$	1,136.69
87108	Membrane Dryer; Drain Tube and Drip Tray Kit	$	55.16
60013	Moisture Monitor Assembly	$	32.45
85028	Motor Disconnect Plug	$	3.50
86010	Nipple, Tank to Outlet Manifold	$	30.90
86446	Outlet Manifold Assembly*	$	107.12
60510	Safety Relief Valve; 140 PSI	$	72.46
86728	Tee; 10mm Push	$	10.82
19278	Tubing; 5/32" OD, Clear	$	3.09
86726	Tubing; Cooler to Membrane Dryer	$	29.20
86727	Tubing; Membrane Dryer to Tank	$	33.53
Electrical Breakdown			
86048	Capacitor, 50 µF, 450 VAC	$	66.95
86645	Power On/Off Switch and Circuit Breaker 20 AMP, AS NEO 21/50	$	91.67
87698	Compressor Head Assembly for AirStar 22/40/50/70 NEO	$	4,425.00
87071-1	Cooler Assembly; 230V Fan	$	36.77
87254	Motor Harness, AS NEO 40/50/70	$	42.23
87253	Motor Harness, AS NEO 30/50/70	$	43.78
85205-6	PCB Replacement Kit AS50 NEO	$	1,317.37
86527	Power Connection Handy Box Assembly, 12 AWG (4ft Long Pigtail)	$	68.50
86438	Touch Screen Assembly	$	175.00
D1213	Touch Screen Ribbon Cable	$	17.85
Additional Items			
87263	Airstar Neo Accessory Kit; AS10, 21, 22, 30, 40, 50	$	271.92
85003	Airstar Motor & Dryer Bypass Kit	$	20.00
87353	Preventive Maintenance Kit for AS50 & AS50 NEO	$	339.00
85493	Remote Air Intake Kit, AS50 / AS50 NEO	$	429.00
67002	Buck/ Boost Transformer, 3.9 kVa	$	819.00
60046	Tubing; 1/2" ID, Clear	$	8.65
80184	Vibration Pad Kit (pkg/4)	$	53.55
87477	Tandem Kit	$	00.00
87472	Firmware Upgrade Kit	$	00.00

AirStar® 70 NEO with Membrane Dryer Parts Breakdown

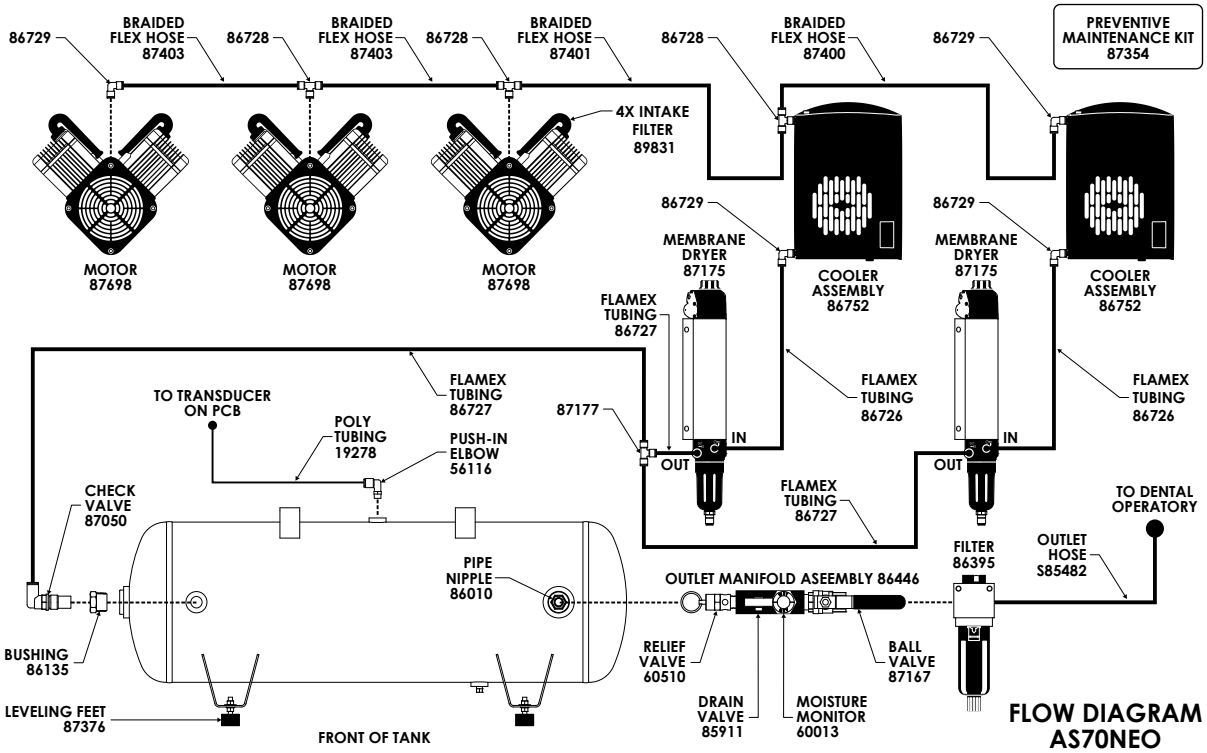

*Drain Valve and Moisture Monitor sold separately

AirStar 70 NEO with Membrane Dryer Electrical Components Parts Breakdown

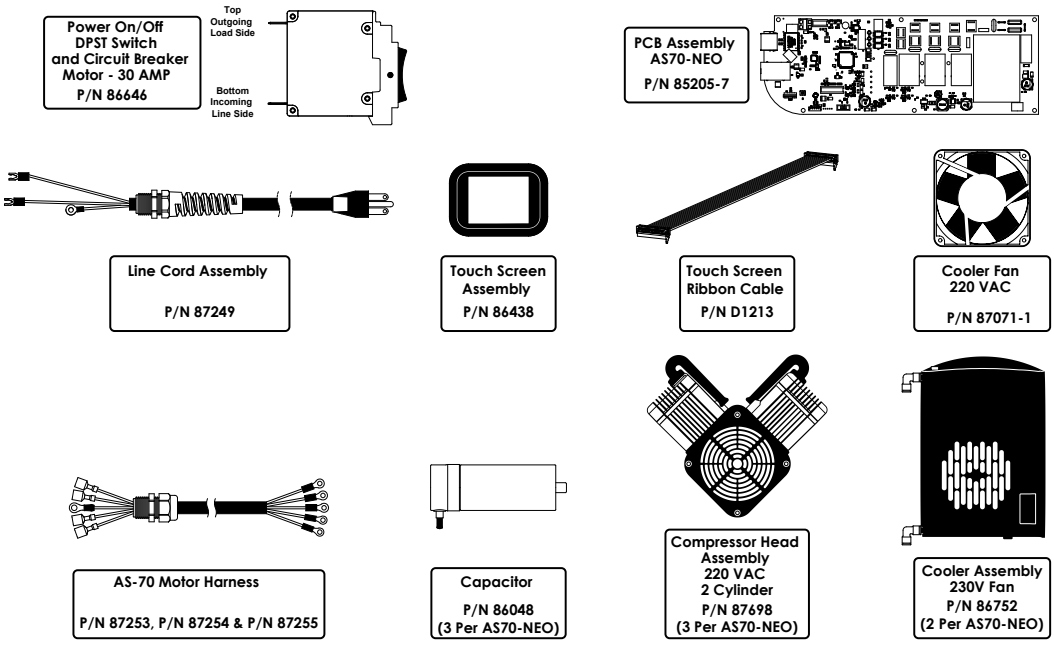

NEO Air Compressors with Membrane Dryer

Part Number	Description		Price
AirStar® AS70 NEO Parts Breakdown			
87167	Ball Valve; 3/8" NPT	$	30.90
87403	Braided Hose; 10mm Push, 11-1/4" Overall Length	$	72.50
87400	Braided Hose; 10mm Push, 7-1/4" Overall Length	$	87.55
87401	Braided Hose; 10mm Push, 8-1/4" Overall Length	$	88.00
86135	Bushing; 3/4" MNPT x 1/2" FBSPP	$	17.51
87050	Main Tank Check Valve, Swivel Elbow	$	45.32
86752	Cooler Assembly	$	254.10
86440	Cooler Support Bracket	$	25.00
85911	Drain Valve Assembly	$	42.18
56116	Elbow; 1/8" MNPT x 5/32 Push	$	6.18
86729	Elbow; 10mm Push	$	18.39
86395	Tank Outlet 5 Micron Filter & Delivery Hose Replacement Kit, 3/8" NPT	$	259.00
87168	Tank Outlet 5 Micron Filter, Replacement Filter Assembly Only, 3/8" NPT	$	45.00
S85482	Hook-Up Hose Kit; 6' Length, 3/8" MNPT	$	50.83
89831	Air Intake Filter Replacement: 1 P/Cylinder for all Airstar Solutions	$	75.00
87376	Rubber Leveling Foot (4 per Compressor)	$	97.00
87175	Kit; Replacement Membrane Dryer	$	1,136.69
87108	Membrane Dryer; Drain Tube and Drip Tray Kit	$	55.16
60013	Moisture Monitor Assembly	$	32.45
85028	Motor Disconnect Plug	$	3.50
86010	Nipple, Tank to Outlet Manifold	$	30.90
86446	Outlet Manifold Assembly*	$	107.12
60510	Safety Relief Valve; 140 PSI	$	72.46
86728	Tee; 10mm Push	$	10.82
87177	Tee; 12mm Push	$	43.26
19278	Tubing; 5/32" OD, Clear	$	3.09
86726	Tubing; Cooler to Membrane Dryer	$	29.20
86727	Tubing; Membrane Dryer to Tank	$	33.53
Electrical Breakdown			
86048	Capacitor, 50 µF, 450 VAC	$	66.95
86646	Power On/Off Switch and Circuit Breaker 30 AMP, AS NEO 70	$	91.67
87698	Compressor Head Assembly for AirStar 22/40/50/70 NEO	$	4,425.00
87071-1	Cooler Assembly; 230V Fan	$	36.77
87253	Motor Harness, AS NEO 30/50/70	$	43.78
87254	Motor Harness, AS NEO 40/50/70	$	42.23
87255	Motor Harness, AS NEO 70	$	53.05
85205-7	PCB Replacement Kit AS70 NEO	$	1,317.37
86528	Power Connection Handy Box Assembly, 10 AWG (4ft Long Pigtail)	$	68.50
86438	Touch Screen Assembly	$	175.00
D1213	Touch Screen Ribbon Cable	$	17.85
Additional Items			
87264	Accessory Kit	$	231.00
85003	Airstar Motor & Dryer Bypass Kit	$	20.00
87354	Preventive Maintenance Kit for AS70 & AS70 NEO	$	479.00
85494	Remote Air Intake Kit, AS70 / AS70 NEO	$	449.00
67000-1	Buck/ Boost Transformer, 7.8 kVa	$	1,779.00
60046	Tubing; 1/2" ID, Clear	$	8.65
80184	Vibration Pad Kit (pkg/4)	$	53.55
87477	Tandem Kit	$	00.00
87472	Firmware Upgrade Kit	$	00.00

AirStar® 10 with Membrane Dryer Parts Breakdown

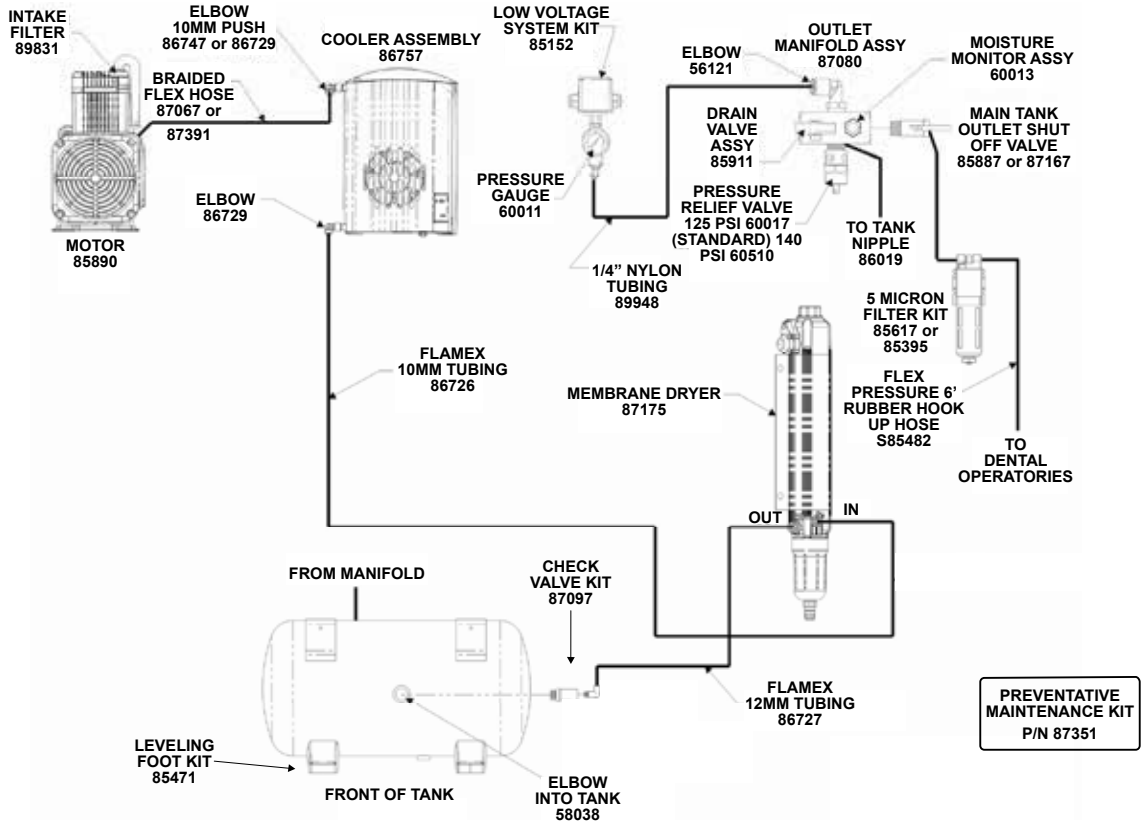

AirStar 10 with Membrane Dryer Electrical Breakdown

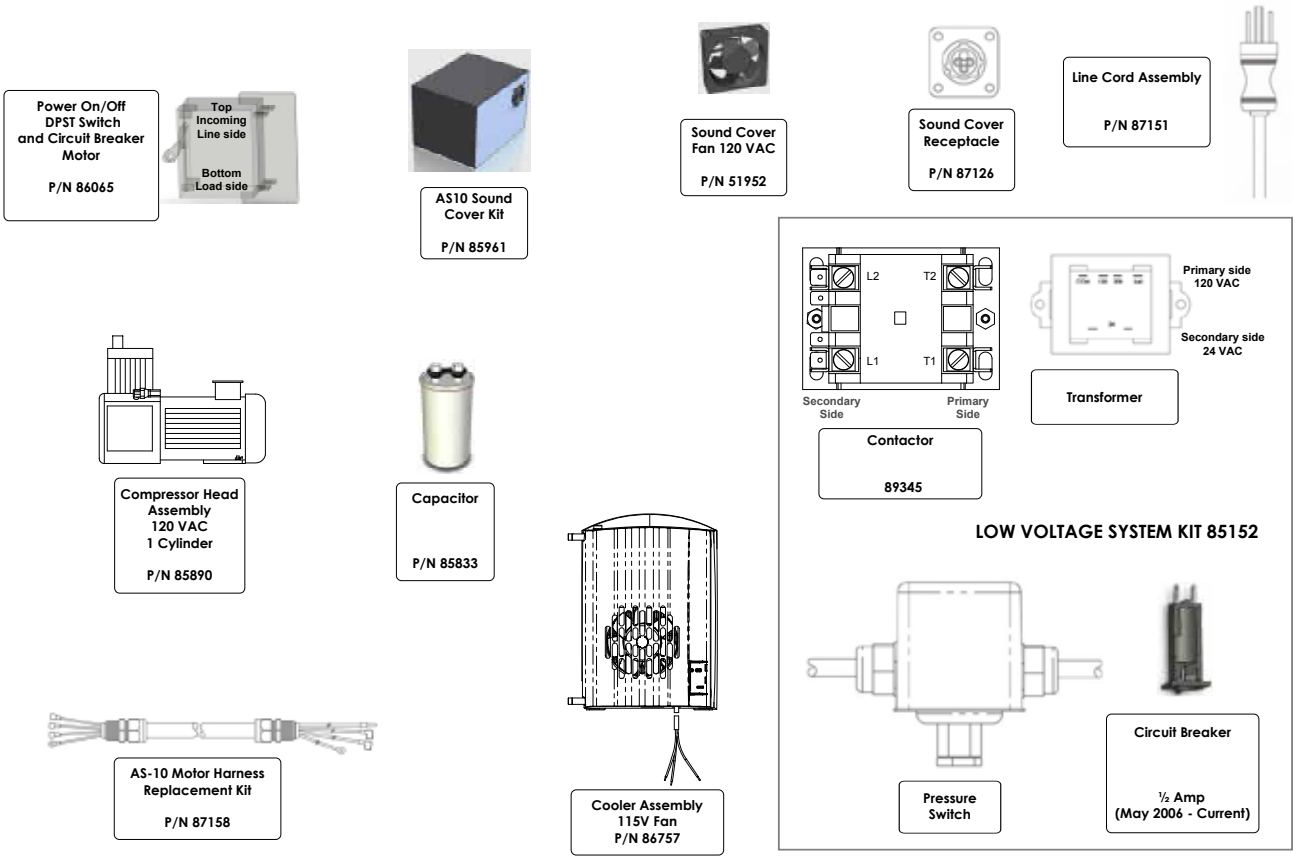

Part Number	Description		Price
AirStar® AS10 Parts Breakdown			
85887	Ball Valve; 1/2" NPT	$	32.45
87167	Ball Valve; 3/8" NPT	$	30.90
87391	Braided Hose; 10mm Push, 16" Overall Length	$	32.00
87067	Braided Hose; Flare x 3/8" Push, 34" Overall Length	$	92.82
87097	Check Valve Kit	$	55.00
86757	Cooler Assembly	$	490.35
85911	Drain Valve Assembly	$	42.18
56121	Elbow; 1/4" MNPT x 1/4 Push	$	8.65
86729	Elbow; 10mm Push	$	18.39
86747	Elbow; 10mm Push x 3/8" Push	$	29.20
86749	Elbow; 12mm Push x 3/8" MBSPP	$	42.18
58038	Elbow; 3/8" MNPT x 3/8" FNPT	$	7.57
85617	Filter Kit; 5 Micron, 1/2" NPT	$	329.00
86395	Tank Outlet 5 Micron Filter & Delivery Hose Replacement Kit, 3/8" NPT	$	259.00
87168	Tank Outlet 5 Micron Filter, Replacement Filter Assembly Only, 3/8" NPT	$	45.00
S85482	Hook-Up Hose Kit; 6' Length, 3/8" MNPT	$	50.83
89831	Air Intake Filter Replacement: 1 P/Cylinder for all Airstar Solutions	$	75.00
85471	Leveling Foot Kit (1 per Compressor)	$	104.91
87175	Kit; Replacement Membrane Dryer	$	1,136.69
87108	Membrane Dryer; Drain Tube and Drip Tray Kit	$	55.16
60013	Moisture Monitor Assembly	$	32.45
86019	Nipple, Tank to Outlet Manifold	$	32.45
87080	Outlet Manifold Assembly; AirStar10M & AirStar12M	$	109.00
60011	Pressure Gauge	$	15.14
60017	Safety Relief Valve; 125 PSI	$	48.67
60510	Safety Relief Valve; 140 PSI	$	72.46
89948	Tubing; 1/4" OD, Black	$	7.57
86726	Tubing; Cooler to Membrane Dryer	$	29.20
86727	Tubing; Membrane Dryer to Tank	$	33.53
Electrical Breakdown			
85833	Capacitor; 65UF, 370VAC, 2-1/2" DI	$	82.19
86065	Circuit Breaker; 10A	$	126.54
117061	Circuit Breaker Low Voltage, 24 VAC, 1/2 Amp	$	23.10
85890	Compressor Head Assembly; AirStar 10, 1 Cyl, 120 VAC	$	3,435.73
89345	Contactor 40 Amp Line Voltage with 24 VAC Coil	$	208.73
87076-1	Cooler Assembly; 115 V Fan	$	32.21
87151	Line Cord Assembly; 115V, AirStar10M & AirStar2	$	82.19
85152	Kit, Low Voltage System, AirStar10 & AirStar21	$	319.04
87158	Motor Harness Replacement Kit	$	51.10
87176	Pressure Switch, 85 to 115 VAC	$	73.65
85961	Sound Cover for AirStar10	$	1,195.00
51952	Sound Cover Fan	$	86.52
87126	Sound Cover Receptacle	$	61.65
89415	Thermal Switch; Sound Cover	$	55.16
86637	Transformer, 208/230 VAC Step-down to 24 VAC	$	73.54
Additional Items			
87133	AirStar Accessory Kit; AS10, 21	$	285.52
85003	Airstar Motor & Dryer Bypass Kit	$	20.00
87351	Preventive Maintenance Kit for AS10/ AS10 NEO & AS12	$	109.00
85491	Remote Air Intake Kit, AS10 / AS10 NEO, AS12	$	369.00
60046	Tubing; 1/2" ID, Clear	$	8.65
80184	Vibration Pad Kit	$	53.55

AirStar 12 with Membrane Dryer Parts Breakdown

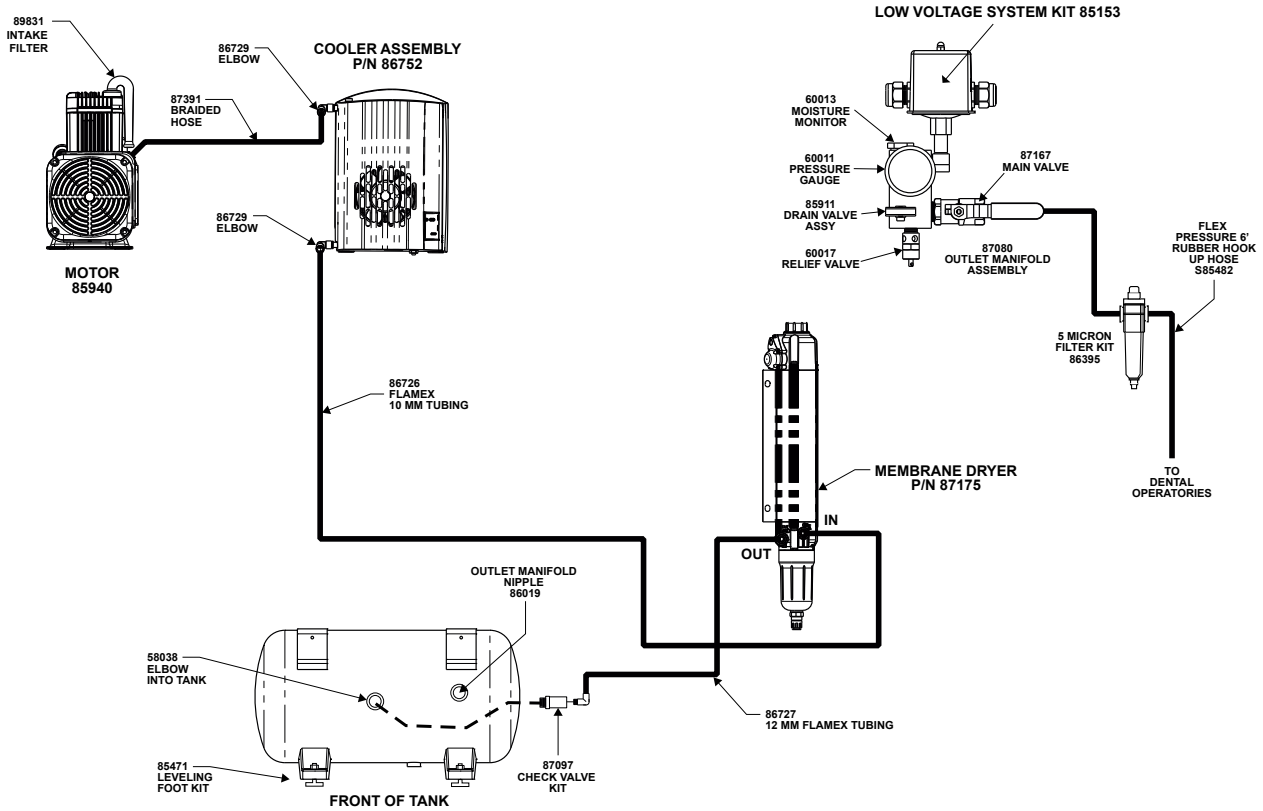

AirStar 12 with Membrane Dryer Electrical Components Parts Breakdown

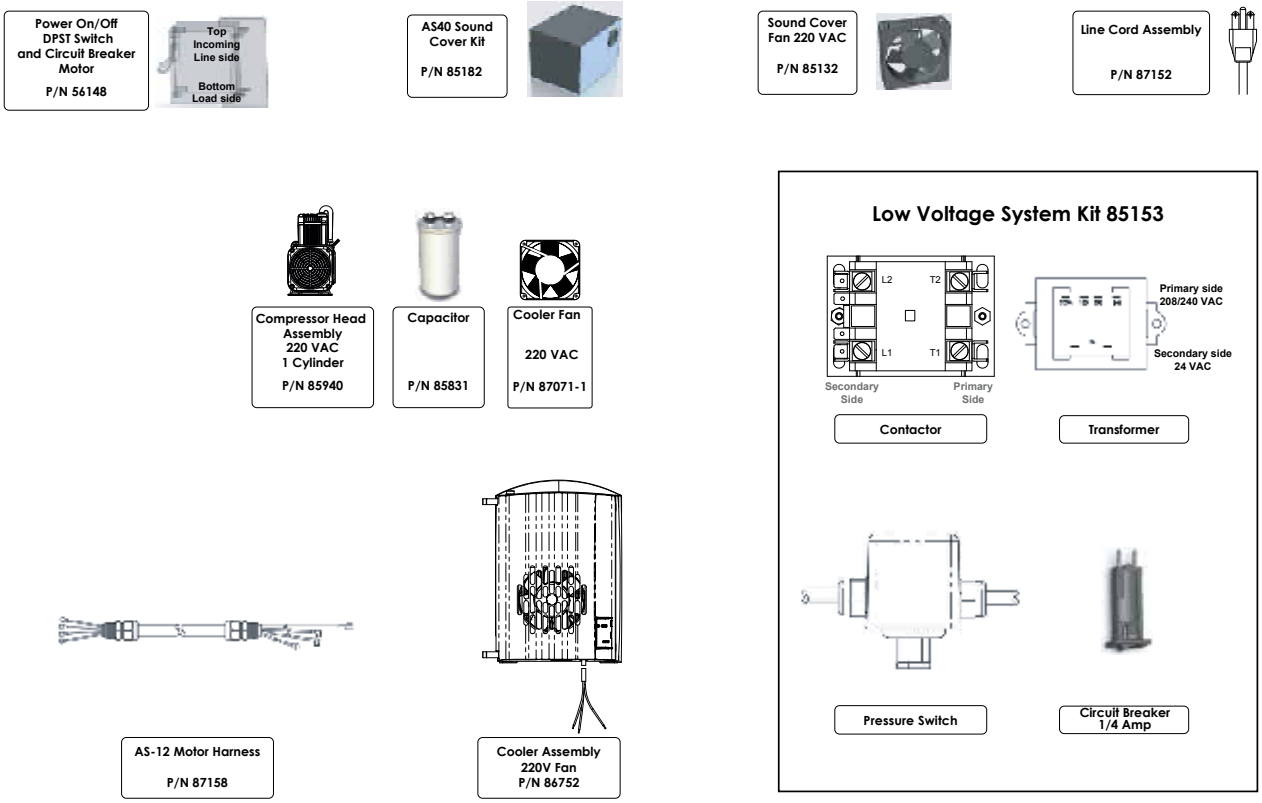

Part Number	Description		Price
AirStar® AS12 Parts Breakdown			
87167	Ball Valve; 3/8" NPT	$	30.90
87391	Braided Hose; 10mm Push, 16" Overall Length	$	32.00
87097	Check Valve Kit	$	55.00
86752	Cooler Assembly	$	254.10
85911	Drain Valve Assembly	$	42.18
86729	Elbow; 10mm Push	$	18.39
86749	Elbow; 12mm Push x 3/8" MBSPP	$	42.18
58038	Elbow; 3/8" MNPT x 3/8" FNPT	$	7.57
86395	Tank Outlet 5 Micron Filter & Delivery Hose Replacement Kit, 3/8" NPT	$	259.00
87168	Tank Outlet 5 Micron Filter, Replacement Filter Assembly Only, 3/8" NPT	$	45.00
S85482	Hook-Up Hose Kit; 6' Length, 3/8" MNPT	$	50.83
89831	Air Intake Filter Replacement: 1 P/Cylinder for all Airstar Solutions	$	75.00
85471	Leveling Foot Kit (1 per Compressor)	$	104.91
87175	Kit; Replacement Membrane Dryer	$	1,136.69
87108	Membrane Dryer; Drain Tube and Drip Tray Kit	$	55.16
60013	Moisture Monitor Assembly	$	32.45
85003	Airstar Motor & Dryer Bypass Kit	$	20.00
86019	Nipple, Tank to Outlet Manifold	$	32.45
87080	Outlet Manifold Assembly; AirStar10M & AirStar12M	$	109.00
60011	Pressure Gauge	$	15.14
60017	Safety Relief Valve; 125 PSI	$	48.67
60510	Safety Relief Valve; 140 PSI	$	72.46
86726	Tubing; Cooler to Membrane Dryer	$	29.20
86727	Tubing; Membrane Dryer to Tank	$	33.53
Electrical Breakdown			
85831	Capacitor (for 85940)	$	35.69
56148	Circuit Breaker; 8A	$	116.80
117690	Circuit Breaker Low Voltage, 24 VAC, 1/4 Amp	$	23.10
85940	Compressor Head Assembly; AirStar 12/30/40, 1 Cyl, 220 VAC	$	3,435.73
89345	Contactor 40 Amp Line Voltage with 24 VAC Coil	$	208.73
87071-1	Cooler Assembly; 230V Fan	$	36.77
87152	Line Cord Assembly; 230V, AS22M, AS30M & VS40, Hospital Grade	$	71.38
85153	Kit, Low Voltage System, AS12, AS22, AS30, AS40, AS50 & AS70	$	322.14
87158	Motor Harness Replacement Kit	$	51.10
87176	Pressure Switch, 85 to 115 VAC	$	73.65
85182	Sound Cover	$	1,190.00
85132	Sound Cover Fan	$	180.61
89415	Thermal Switch; Sound Cover	$	55.16
86637	Transformer, 208/230 VAC Step-down to 24 VAC	$	73.54
Additional Items			
87133	AirStar Accessory Kit; AS10, 21	$	285.52
85003	Motor & Membrane Dryer Bypass Kit	$	20.00
87351	Preventive Maintenance Kit for AS10/ AS10 NEO & AS12	$	109.00
85491	Remote Air Intake Kit, AS10 / AS10 NEO, AS12	$	369.00
67002	Buck/ Boost Transformer, 3.9 kVa	$	819.00
60046	Tubing; 1/2" ID, Clear	$	8.65
80184	Vibration Pad Kit	$	53.55

AirStar® 21 with Membrane Dryer Parts Breakdown

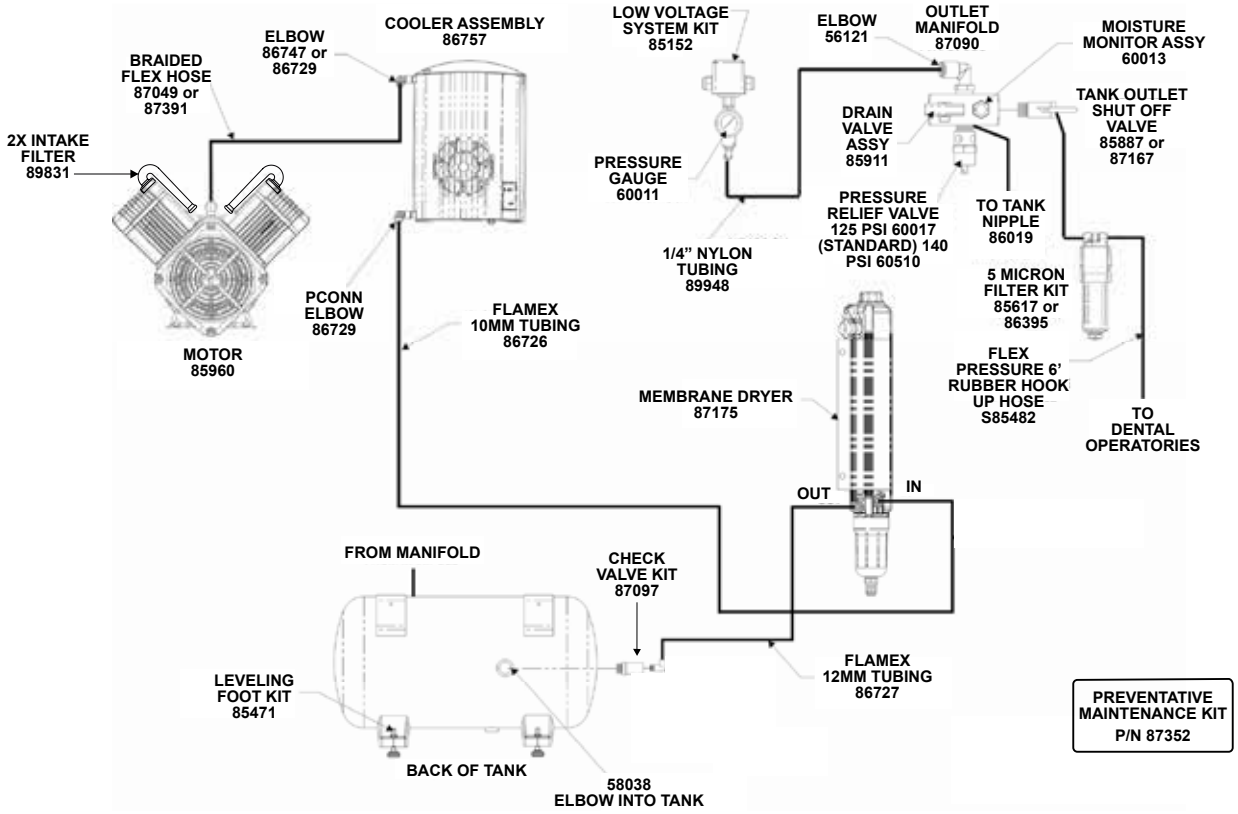

AirStar 21 with Membrane Dryer Electrical Breakdown

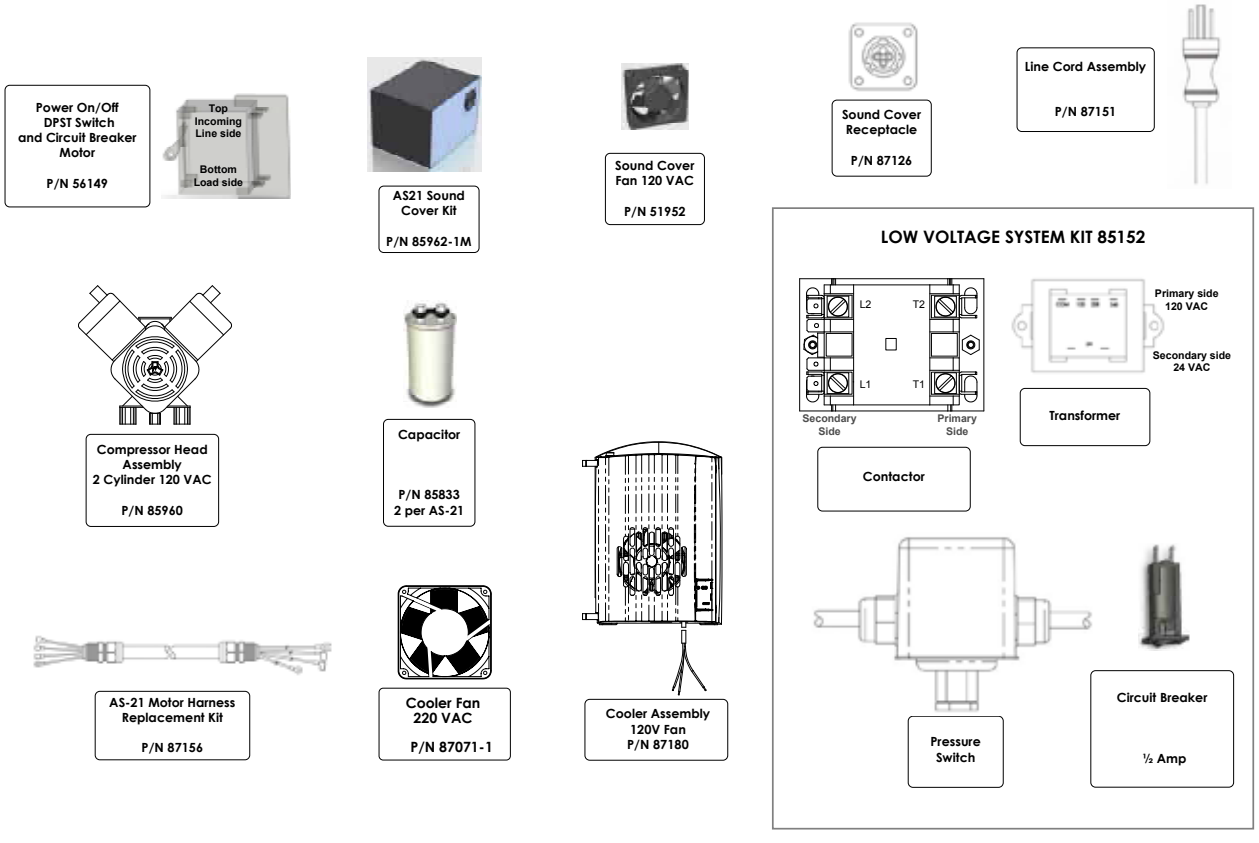

Part Number	Description		Price
AirStar® AS21 Parts Breakdown			
85887	Ball Valve; 1/2" NPT	$	32.45
87167	Ball Valve; 3/8" NPT	$	30.90
87391	Braided Hose; 10mm Push, 16" Overall Length	$	32.00
87049	Braided Hose; Flare x 3/8" Push, 38-1/2" Overall Length	$	115.72
87097	Check Valve Kit	$	55.00
86757	Cooler Assembly	$	490.35
85911	Drain Valve Assembly	$	42.18
56121	Elbow; 1/4" MNPT x 1/4 Push	$	8.65
86729	Elbow; 10mm Push	$	18.39
86747	Elbow; 10mm Push x 3/8" Push	$	29.20
86749	Elbow; 12mm Push x 3/8" MBSPP	$	42.18
58038	Elbow; 3/8" MNPT x 3/8" FNPT	$	7.57
85617	Filter Kit; 5 Micron, 1/2" NPT	$	329.00
86395	Tank Outlet 5 Micron Filter & Delivery Hose Replacement Kit, 3/8" NPT	$	259.00
87168	Tank Outlet 5 Micron Filter, Replacement Filter Assembly Only, 3/8" NPT	$	45.00
S85482	Hook-Up Hose Kit; 6' Length, 3/8" MNPT	$	50.83
89831	Air Intake Filter Replacement: 1 P/Cylinder for all Airstar Solutions	$	75.00
85471	Leveling Foot Kit (1 per Compressor)	$	104.91
87175	Kit; Replacement Membrane Dryer	$	1,136.69
87108	Membrane Dryer; Drain Tube and Drip Tray Kit	$	55.16
60013	Moisture Monitor Assembly	$	32.45
86019	Nipple, Tank to Outlet Manifold	$	32.45
87090	Oulet Manifold Assembly AirStar21M, 22M, 30M, 50M, 70M	$	107.12
60011	Pressure Gauge	$	15.14
60017	Safety Relief Valve; 125 PSI	$	48.67
60510	Safety Relief Valve; 140 PSI	$	72.46
89948	Tubing; 1/4" OD, Black	$	7.57
86726	Tubing; Cooler to Membrane Dryer	$	29.20
86727	Tubing; Membrane Dryer to Tank	$	33.53
Electrical Breakdown			
85833	Capacitor; 65UF, 370VAC, 2-1/2" DI	$	82.19
56149	Circuit Breaker; 16A	$	116.80
117690	Circuit Breaker Low Voltage, 24 VAC, 1/4 Amp	$	23.10
85960	Compressor Head Assembly; AirStar 21, 2 Cyl, 120 VAC	$	4,424.78
89345	Contactor 40 Amp Line Voltage with 24 VAC Coil	$	208.73
87076-1	Cooler Assembly; 115 V Fan	$	32.21
87151	Line Cord Assembly; 115V, AirStar10M & AirStar2	$	82.19
85152	Kit, Low Voltage System, AirStar10 & AirStar21	$	319.04
87156	Motor Harness Replacement Kit	$	51.10
87176	Pressure Switch, 85 to 115 VAC	$	73.65
85962-1M	Sound Cover for AirStar21	$	1,445.00
51952	Sound Cover Fan	$	86.52
87126	Sound Cover Receptacle	$	61.65
89415	Thermal Switch; Sound Cover	$	55.16
86637	Transformer, 208/230 VAC Step-down to 24 VAC	$	73.54
Additional Items			
87133	AirStar Accessory Kit; AS10, 21	$	285.52
85003	Airstar Motor & Dryer Bypass Kit	$	20.00
87352	Preventive Maintenance Kit for AS21/ AS21 NEO, AS22 / AS22 NEO & AS30 / AS30 NEO	$	179.00
85492	Remote Air Intake Kit, AS21 / AS21 NEO, AS22 / AS22 NEO, AS30 / AS30 NEO	$	389.00
60046	Tubing; 1/2" ID, Clear	$	8.65
80184	Vibration Pad Kit	$	53.55

AirStar® 22 with Membrane Dryer Parts Breakdown

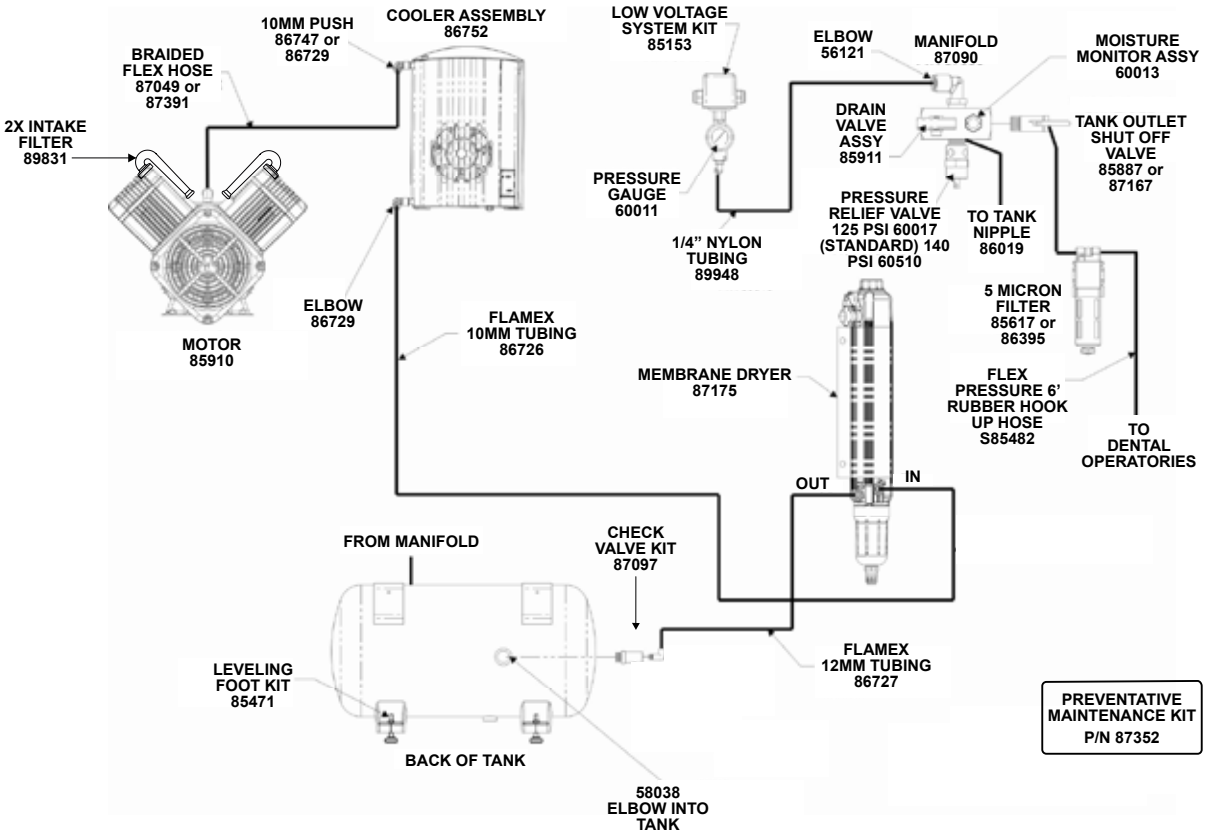

AirStar 22 with Membrane Dryer Electrical Breakdown

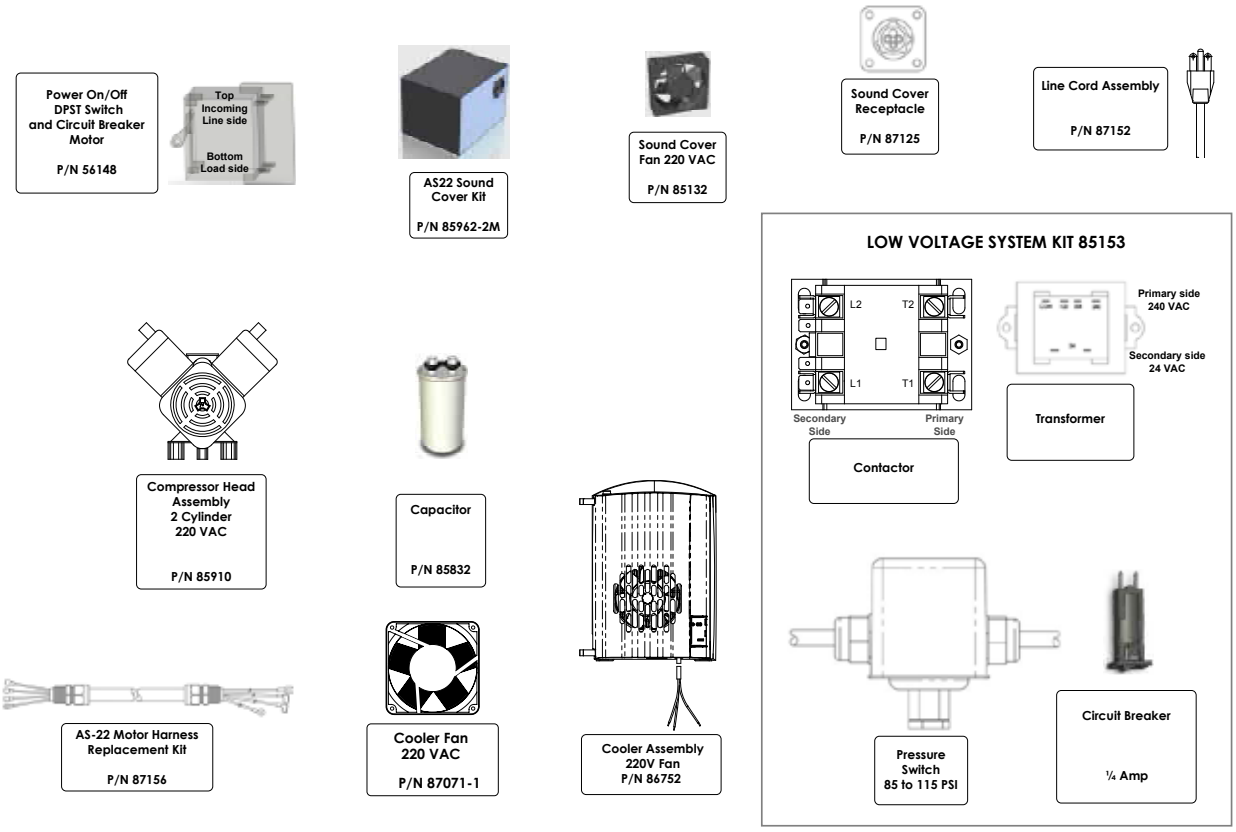

Part Number	Description		Price
AirStar® AS22 Parts Breakdown			
85887	Ball Valve; 1/2" NPT	$	32.45
87167	Ball Valve; 3/8" NPT	$	30.90
87391	Braided Hose; 10mm Push, 16" Overall Length	$	32.00
87049	Braided Hose; Flare x 3/8" Push, 38-1/2" Overall Length	$	115.72
87097	Check Valve Kit	$	55.00
86752	Cooler Assembly	$	254.10
85911	Drain Valve Assembly	$	42.18
56121	Elbow; 1/4" MNPT x 1/4 Push	$	8.65
86729	Elbow; 10mm Push	$	18.39
86747	Elbow; 10mm Push x 3/8" Push	$	29.20
86749	Elbow; 12mm Push x 3/8" MBSPP	$	42.18
58038	Elbow; 3/8" MNPT x 3/8" FNPT	$	7.57
85617	Filter Kit; 5 Micron, 1/2" NPT	$	329.00
86395	Tank Outlet 5 Micron Filter & Delivery Hose Replacement Kit, 3/8" NPT	$	259.00
87168	Tank Outlet 5 Micron Filter, Replacement Filter Assembly Only, 3/8" NPT	$	45.00
S85482	Hook-Up Hose Kit; 6' Length, 3/8" MNPT	$	50.83
89831	Air Intake Filter Replacement: 1 P/Cylinder for all Airstar Solutions	$	75.00
85471	Leveling Foot Kit (1 per Compressor)	$	104.91
87175	Kit; Replacement Membrane Dryer	$	1,136.69
87108	Membrane Dryer; Drain Tube and Drip Tray Kit	$	55.16
60013	Moisture Monitor Assembly	$	32.45
86019	Nipple, Tank to Outlet Manifold	$	32.45
87090	Oulet Manifold Assembly AirStar21M, 22M, 30M, 50M, 70M	$	107.12
60011	Pressure Gauge	$	15.14
60017	Safety Relief Valve; 125 PSI	$	48.67
60510	Safety Relief Valve; 140 PSI	$	72.46
89948	Tubing; 1/4" OD, Black	$	7.57
86726	Tubing; Cooler to Membrane Dryer	$	29.20
86727	Tubing; Membrane Dryer to Tank	$	33.53
Electrical Breakdown			
85832	Capacitor (for 85910)	$	66.95
56148	Circuit Breaker; 8A	$	116.80
117690	Circuit Breaker Low Voltage, 24 VAC, 1/4 Amp	$	23.10
85910	Compressor Head Assembly; AirStar 22/40/50/70, 2 Cyl, 220 VAC	$	4,424.78
89345	Contactor 40 Amp Line Voltage with 24 VAC Coil	$	208.73
87071-1	Cooler Assembly; 230V Fan	$	36.77
87152	Line Cord Assembly; 230V, AS22M, AS30M & VS40, Hospital Grade	$	71.38
85153	Kit, Low Voltage System, AS12, AS22, AS30, AS40, AS50 & AS70	$	322.14
87156	Motor Harness Replacement Kit	$	51.10
87176	Pressure Switch, 85 to 115 VAC	$	73.65
85962-2M	Sound Cover for AirStar22	$	1,445.00
85132	Sound Cover Fan	$	180.61
87125	Sound Cover Receptacle	$	57.00
89415	Thermal Switch; Sound Cover	$	55.16
86637	Transformer, 208/230 VAC Step-down to 24 VAC	$	73.54
Additional Items			
87133	AirStar Accessory Kit; AS10, 21	$	285.52
85003	Airstar Motor & Dryer Bypass Kit	$	20.00
87352	Preventive Maintenance Kit for AS21/ AS21 NEO, AS22 / AS22 NEO & AS30 / AS30 NEO	$	179.00
85492	Remote Air Intake Kit, AS21 / AS21 NEO, AS22 / AS22 NEO, AS30 / AS30 NEO	$	389.00
67002	Buck/ Boost Transformer, 3.9 kVa	$	819.00
60046	Tubing; 1/2" ID, Clear	$	8.65
80184	Vibration Pad Kit (pkg/4)	$	53.55

AirStar® 30 with Membrane Dryer Parts Breakdown

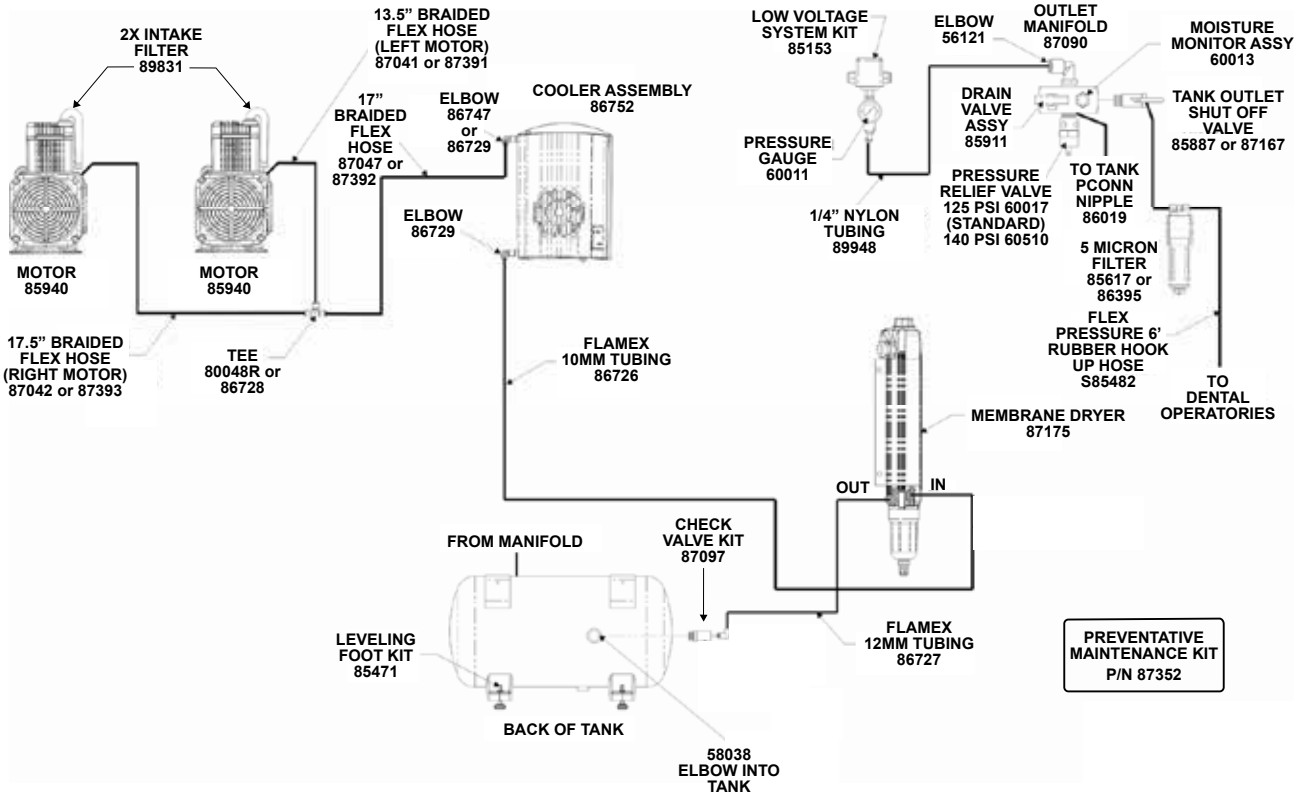

AirStar 30 with Membrane Dryer Electrical Breakdown

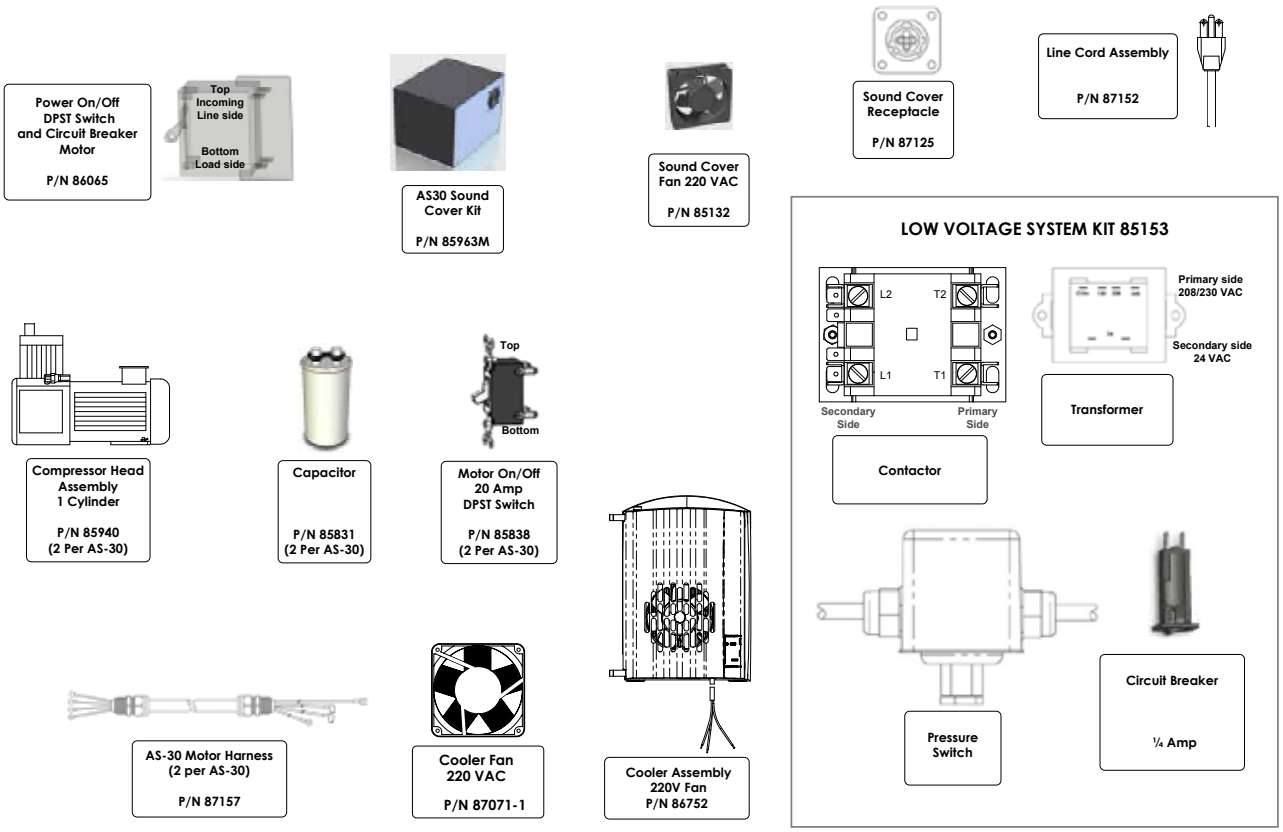

Part Number	Description		Price
AirStar® AS30 Parts Breakdown			
85887	Ball Valve; 1/2" NPT	$	32.45
87167	Ball Valve; 3/8" NPT	$	30.90
87047	Braided Hose; 10mm Push, 14-1/2" Overall Length	$	80.03
87391	Braided Hose; 10mm Push, 16" Overall Length	$	32.00
87392	Braided Hose; 10mm Push, 18" Overall Length	$	33.00
87393	Braided Hose; 10mm Push, 21" Overall Length	$	35.00
87041	Braided Hose; Flare x 1/4" MNPT, 13-1/2" Overall Length	$	80.03
87042	Braided Hose; Flare x 1/4" MNPT, 17-1/2" Overall Length	$	75.71
87097	Check Valve Kit	$	55.00
86752	Cooler Assembly	$	254.10
85911	Drain Valve Assembly	$	42.18
56121	Elbow; 1/4" MNPT x 1/4 Push	$	8.65
86729	Elbow; 10mm Push	$	18.39
86747	Elbow; 10mm Push x 3/8" Push	$	29.20
86749	Elbow; 12mm Push x 3/8" MBSPP	$	42.18
58038	Elbow; 3/8" MNPT x 3/8" FNPT	$	7.57
85617	Filter Kit; 5 Micron, 1/2" NPT	$	329.00
86395	Tank Outlet 5 Micron Filter & Delivery Hose Replacement Kit, 3/8" NPT	$	259.00
87168	Tank Outlet 5 Micron Filter, Replacement Filter Assembly Only, 3/8" NPT	$	45.00
S85482	Hook-Up Hose Kit; 6' Length, 3/8" MNPT	$	50.83
89831	Air Intake Filter Replacement: 1 P/Cylinder for all Airstar Solutions	$	75.00
85471	Leveling Foot Kit (1 per Compressor)	$	104.91
87175	Kit; Replacement Membrane Dryer	$	1,136.69
87108	Membrane Dryer; Drain Tube and Drip Tray Kit	$	55.16
60013	Moisture Monitor Assembly	$	32.45
86019	Nipple, Tank to Outlet Manifold	$	32.45
87090	Oulet Manifold Assembly AirStar21M, 22M, 30M, 50M, 70M	$	107.12
60011	Pressure Gauge	$	15.14
60017	Safety Relief Valve; 125 PSI	$	48.67
60510	Safety Relief Valve; 140 PSI	$	72.46
80048R	Tee; 1/4" FNPT	$	10.82
86728	Tee; 10mm Push	$	10.82
89948	Tubing; 1/4" OD, Black	$	7.57
86726	Tubing; Cooler to Membrane Dryer	$	29.20
86727	Tubing; Membrane Dryer to Tank	$	33.53
Electrical Breakdown			
85831	Capacitor (for 85940)	$	35.69
86065	Circuit Breaker; 10A	$	126.54
117690	Circuit Breaker 1/4 Amp (Low Voltage Circuit)	$	24.02
85940	Compressor Head Assembly; AirStar 12/30/40, 1 Cyl, 220 VAC	$	3,435.73
89345	Contactor 40 Amp Line Voltage with 24 VAC Coil	$	208.73
87071-1	Cooler Assembly; 230V Fan	$	36.77
87152	Line Cord Assembly; 230V, AS22M, AS30M & VS40, Hospital Grade	$	71.38
85153	Kit, Low Voltage System, AS12, AS22, AS30, AS40, AS50 & AS70	$	322.14
87157	Motor Harness	$	110.31
87176	Pressure Switch, 85 to 115 VAC	$	73.65
85963M	Sound Cover for AirStar30	$	1,545.00
85132	Sound Cover Fan	$	180.61
87125	Sound Cover Receptacle	$	57.00
85838	Switch; Toggle, 20A, 120 - 277	$	35.69
89415	Thermal Switch; Sound Cover	$	55.16
86637	Transformer, 208/230 VAC Step-down to 24 VAC	$	73.54
Additional Items			
87133	AirStar Accessory Kit; AS10, 21	$	285.52
85003	Airstar Motor & Dryer Bypass Kit	$	20.00
87352	Preventive Maintenance Kit for AS21/ AS21 NEO, AS22 / AS22 NEO & AS30 / AS30 NEO	$	179.00
85492	Remote Air Intake Kit, AS21 / AS21 NEO, AS22 / AS22 NEO, AS30 / AS30 NEO	$	389.00
67002	Buck/ Boost Transformer, 3.9 kVa	$	819.00
60046	Tubing; 1/2" ID, Clear	$	8.65
80184	Vibration Pad Kit (pkg/4)	$	53.55

AirStar 40 with Membrane Dryer Parts Breakdown

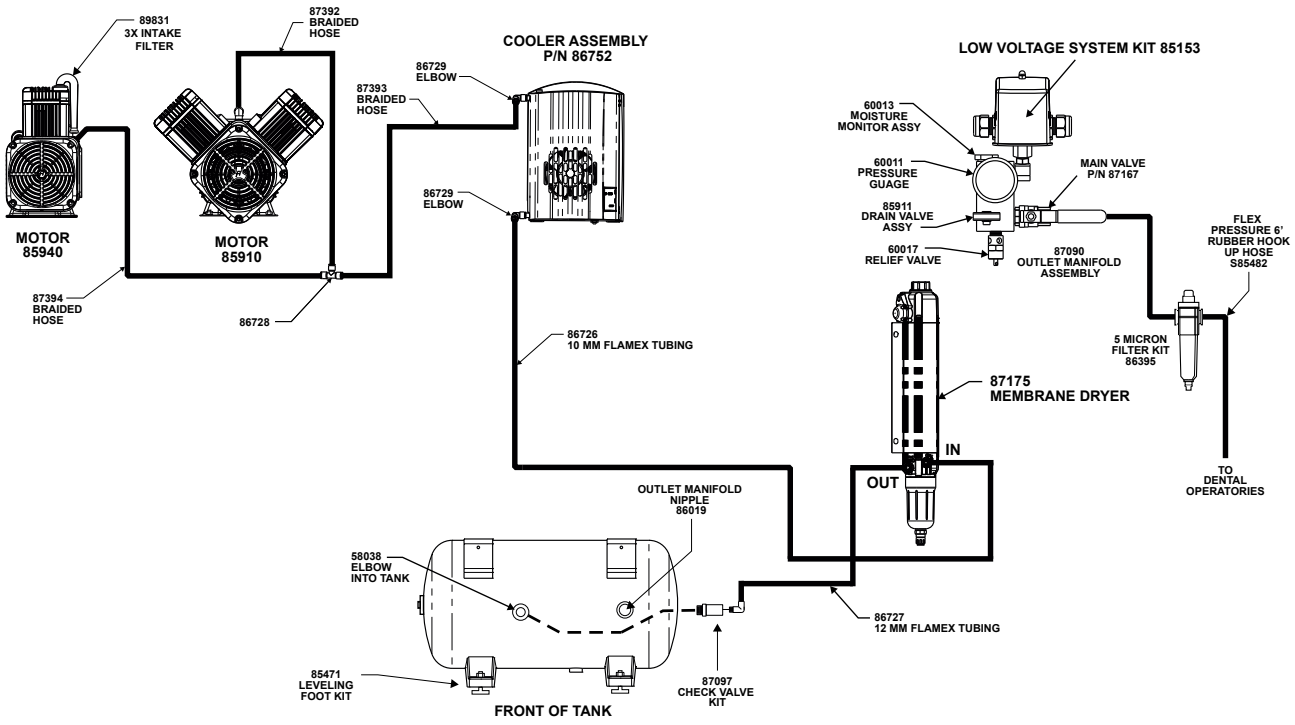

AirStar 40 with Membrane Dryer Electrical Components Parts Breakdown

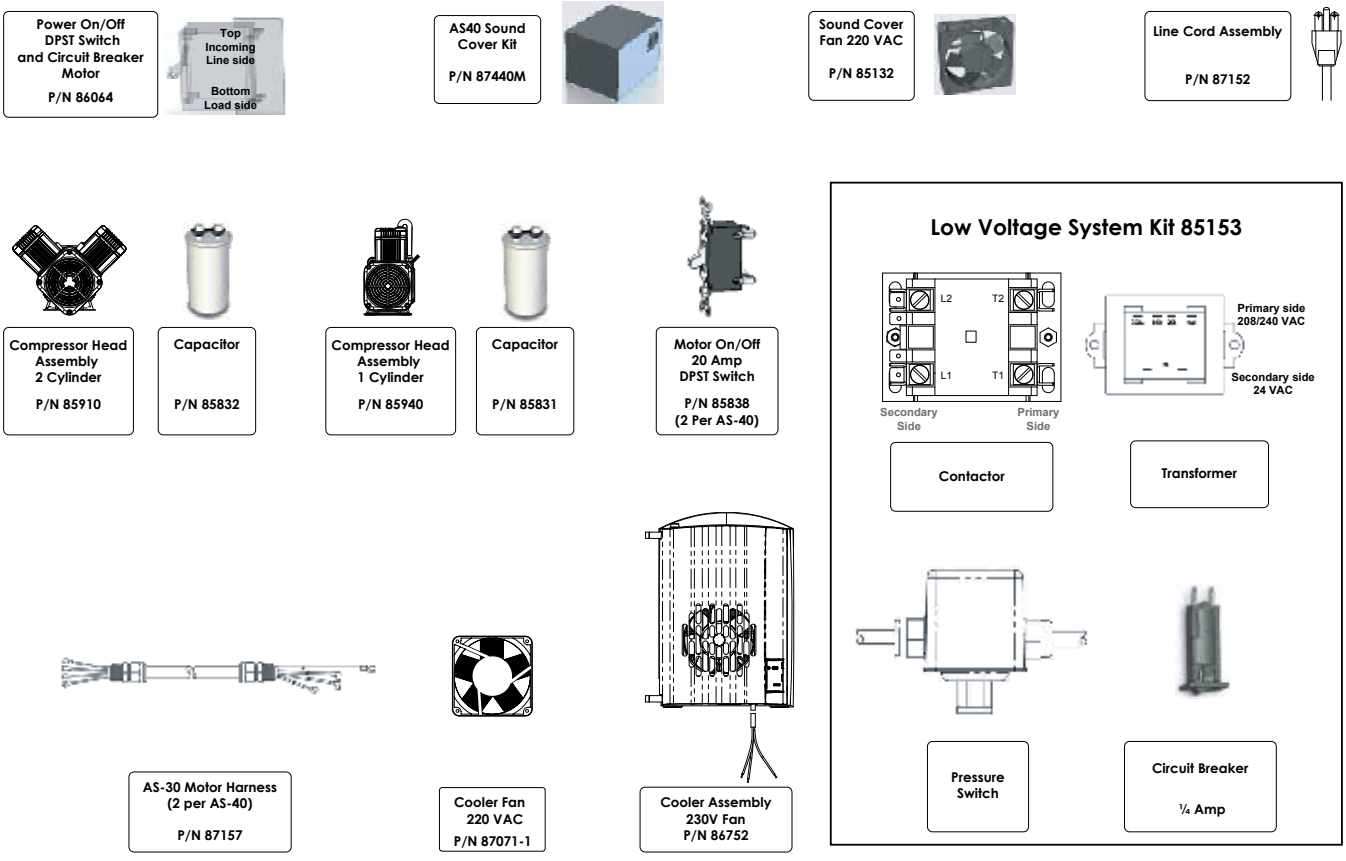

Part Number	Description		Price
AirStar® AS40 Parts Breakdown			
87167	Ball Valve; 3/8" NPT	$	30.90
87392	Braided Hose; 10mm Push, 18" Overall Length	$	33.00
87393	Braided Hose; 10mm Push, 21" Overall Length	$	35.00
87394	Braided Hose; 10mm Push, 26" Overall Length	$	37.00
87097	Check Valve Kit	$	55.00
86752	Cooler Assembly	$	254.10
85911	Drain Valve Assembly	$	42.18
86729	Elbow; 10mm Push	$	18.39
86749	Elbow; 12mm Push x 3/8" MBSPP	$	42.18
58038	Elbow; 3/8" MNPT x 3/8" FNPT	$	7.57
86395	Tank Outlet 5 Micron Filter & Delivery Hose Replacement Kit, 3/8" NPT	$	259.00
87168	Tank Outlet 5 Micron Filter, Replacement Filter Assembly Only, 3/8" NPT	$	45.00
S85482	Hook-Up Hose Kit; 6' Length, 3/8" MNPT	$	50.83
89831	Air Intake Filter Replacement: 1 P/Cylinder for all Airstar Solutions	$	75.00
85471	Leveling Foot Kit (1 per Compressor)	$	104.91
87175	Kit; Replacement Membrane Dryer	$	1,136.69
87108	Membrane Dryer; Drain Tube and Drip Tray Kit	$	55.16
60013	Moisture Monitor Assembly	$	32.45
86019	Nipple, Tank to Outlet Manifold	$	32.45
87090	Oulet Manifold Assembly AirStar21M, 22M, 30M, 50M, 70M	$	107.12
60011	Pressure Gauge	$	15.14
60017	Safety Relief Valve; 125 PSI	$	48.67
60510	Safety Relief Valve; 140 PSI	$	72.46
80048R	Tee; 1/4" FNPT	$	10.82
86728	Tee; 10mm Push	$	10.82
86726	Tubing; Cooler to Membrane Dryer	$	29.20
86727	Tubing; Membrane Dryer to Tank	$	33.53
Electrical Breakdown			
85831	Capacitor (for 85940)	$	35.69
85832	Capacitor (for 85910)	$	66.95
86064	Circuit Breaker; 15A	$	156.82
117690	Circuit Breaker 1/4 Amp (Low Voltage Circuit)	$	24.02
85940	Compressor Head Assembly; AirStar 12/30/40, 1 Cyl, 220 VAC	$	3,435.73
85910	Compressor Head Assembly; AirStar 22/40/50/70, 2 Cyl, 220 VAC	$	4,424.78
89345	Contactor 40 Amp Line Voltage with 24 VAC Coil	$	208.73
87071-1	Cooler Assembly; 230V Fan	$	36.77
87152	Line Cord Assembly; 230V, AS22M, AS30M & VS40, Hospital Grade	$	71.38
85153	Kit, Low Voltage System, AS12, AS22, AS30, AS40, AS50 & AS70	$	322.14
87157	Motor Harness	$	110.31
87176	Pressure Switch, 85 to 115 VAC	$	73.65
87440M	Sound Cover for AS40	$	1,695.00
85132	Sound Cover Fan	$	180.61
85838	Switch; Toggle, 20A, 120 - 277	$	35.69
89415	Thermal Switch; Sound Cover	$	55.16
86637	Transformer, 208/230 VAC Step-down to 24 VAC	$	73.54
Additional Items			
87133	AirStar Accessory Kit; AS10, 21	$	285.52
85003	Airstar Motor & Dryer Bypass Kit	$	20.00
87355	Preventive Maintenance Kit for AS40 & AS40 NEO	$	249.00
87361	Remote Air Intake Kit, AS40 / AS40 NEO	$	393.75
67002	Buck/ Boost Transformer, 3.9 kVa	$	819.00
60046	Tubing; 1/2" ID, Clear	$	8.65
80184	Vibration Pad Kit (pkg/4)	$	53.55

AirStar® 50 with Membrane Dryer Parts Breakdown

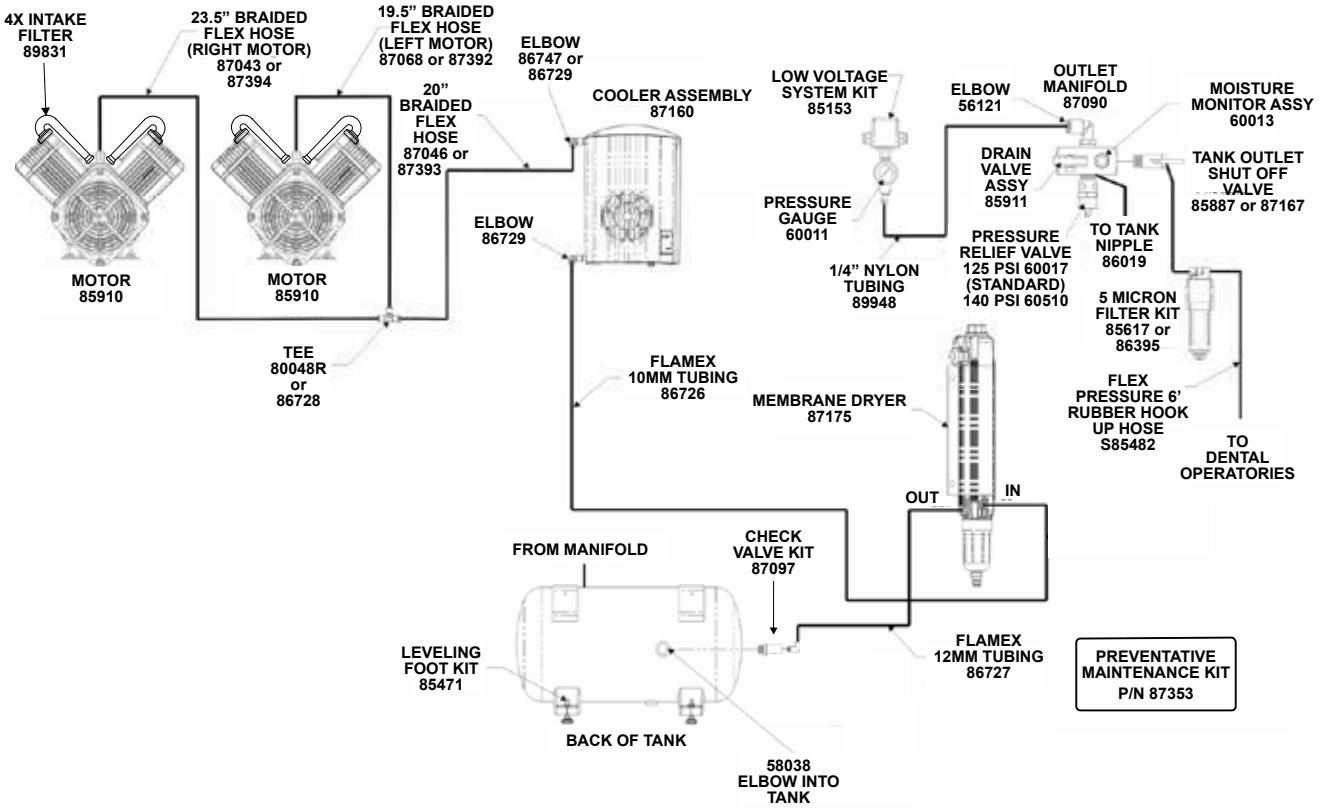

AirStar 50 with Membrane Dryer Electrical Breakdown

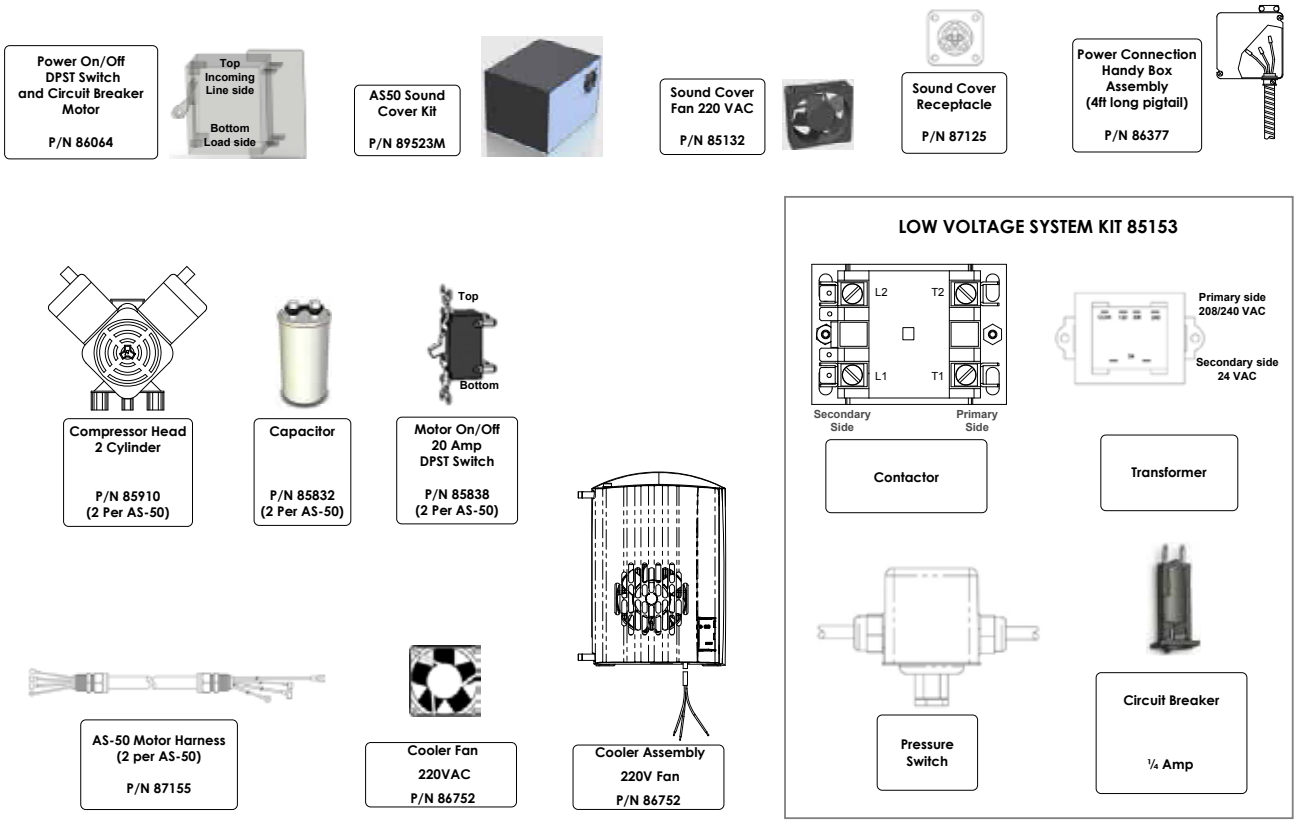

Part Number	Description	Price
AirStar® AS50 Parts Breakdown		
85887	Ball Valve; 1/2" NPT	$ 32.45
87167	Ball Valve; 3/8" NPT	$ 30.90
87046	Braided Hose; 1/4" MNPT x 3/8" Push, 20" Overall Length	$ 78.41
87392	Braided Hose; 10mm Push, 18" Overall Length	$ 33.00
87393	Braided Hose; 10mm Push, 21" Overall Length	$ 35.00
87394	Braided Hose; 10mm Push, 26" Overall Length	$ 37.00
87068	Braided Hose; Flare x 1/4" MNPT, 19-1/2" Overall Length	$ 73.54
87043	Braided Hose; Flare x 1/4" MNPT, 22" Overall Length	$ 98.42
87097	Check Valve Kit	$ 55.00
86752	Cooler Assembly	$ 254.10
85911	Drain Valve Assembly	$ 42.18
56121	Elbow; 1/4" MNPT x 1/4 Push	$ 8.65
86729	Elbow; 10mm Push	$ 18.39
86747	Elbow; 10mm Push x 3/8" Push	$ 29.20
86749	Elbow; 12mm Push x 3/8" MBSPP	$ 42.18
58038	Elbow; 3/8" MNPT x 3/8" FNPT	$ 7.57
85617	Filter Kit; 5 Micron, 1/2" NPT	$ 329.00
86395	Tank Outlet 5 Micron Filter & Delivery Hose Replacement Kit, 3/8" NPT	$ 259.00
87168	Tank Outlet 5 Micron Filter, Replacement Filter Assembly Only, 3/8" NPT	$ 45.00
S85482	Hook-Up Hose Kit; 6' Length, 3/8" MNPT	$ 50.83
89831	Air Intake Filter Replacement: 1 P/Cylinder for all Airstar Solutions	$ 75.00
85471	Leveling Foot Kit (1 per Compressor)	$ 104.91
87175	Kit; Replacement Membrane Dryer	$ 1,136.69
87108	Membrane Dryer; Drain Tube and Drip Tray Kit	$ 55.16
60013	Moisture Monitor Assembly	$ 32.45
86019	Nipple, Tank to Outlet Manifold	$ 32.45
87090	Oulet Manifold Assembly AirStar21M, 22M, 30M, 50M, 70M	$ 107.12
60011	Pressure Gauge	$ 15.14
60017	Safety Relief Valve; 125 PSI	$ 48.67
60510	Safety Relief Valve; 140 PSI	$ 72.46
80048R	Tee; 1/4" FNPT	$ 10.82
86728	Tee; 10mm Push	$ 10.82
89948	Tubing; 1/4" OD, Black	$ 7.57
86726	Tubing; Cooler to Membrane Dryer	$ 29.20
86727	Tubing; Membrane Dryer to Tank	$ 33.53
Electrical Breakdown		
85832	Capacitor (for 85910)	$ 66.95
86064	Circuit Breaker; 15A	$ 156.82
117690	Circuit Breaker 1/4 Amp (Low Voltage Circuit)	$ 24.02
85910	Compressor Head Assembly; AirStar 22/40/50/70, 2 Cyl, 220 VAC	$ 4,424.78
89345	Contactor 40 Amp Line Voltage with 24 VAC Coil	$ 208.73
87071-1	Cooler Assembly; 230V Fan	$ 36.77
85153	Kit, Low Voltage System, AS12, AS22, AS30, AS40, AS50 & AS70	$ 322.14
87155	Motor Harness	$ 103.82
86377	Power Connection Assembly; AS50	$ 71.92
87176	Pressure Switch, 85 to 115 VAC	$ 73.65
89523M	Sound Cover for AS50	$ 1,845.00
85132	Sound Cover Fan	$ 180.61
87125	Sound Cover Receptacle	$ 57.00
85838	Switch; Toggle, 20A, 120 - 277	$ 35.69
89415	Thermal Switch; Sound Cover	$ 55.16
86637	Transformer, 208/230 VAC Step-down to 24 VAC	$ 73.54
Additional Items		
87133	AirStar Accessory Kit; AS10, 21	$ 285.52
85003	Airstar Motor & Dryer Bypass Kit	$ 20.00
87353	Preventive Maintenance Kit for AS50 & AS50 NEO	$ 313.95
85493	Remote Air Intake Kit, AS50 / AS50 NEO	$ 429.00
67002	Buck/ Boost Transformer, 3.9 kVa	$ 819.00
60046	Tubing; 1/2" ID, Clear	$ 8.65
80184	Vibration Pad Kit (pkg/4)	$ 53.55

AirStar® 70 with Membrane Dryer Parts Breakdown

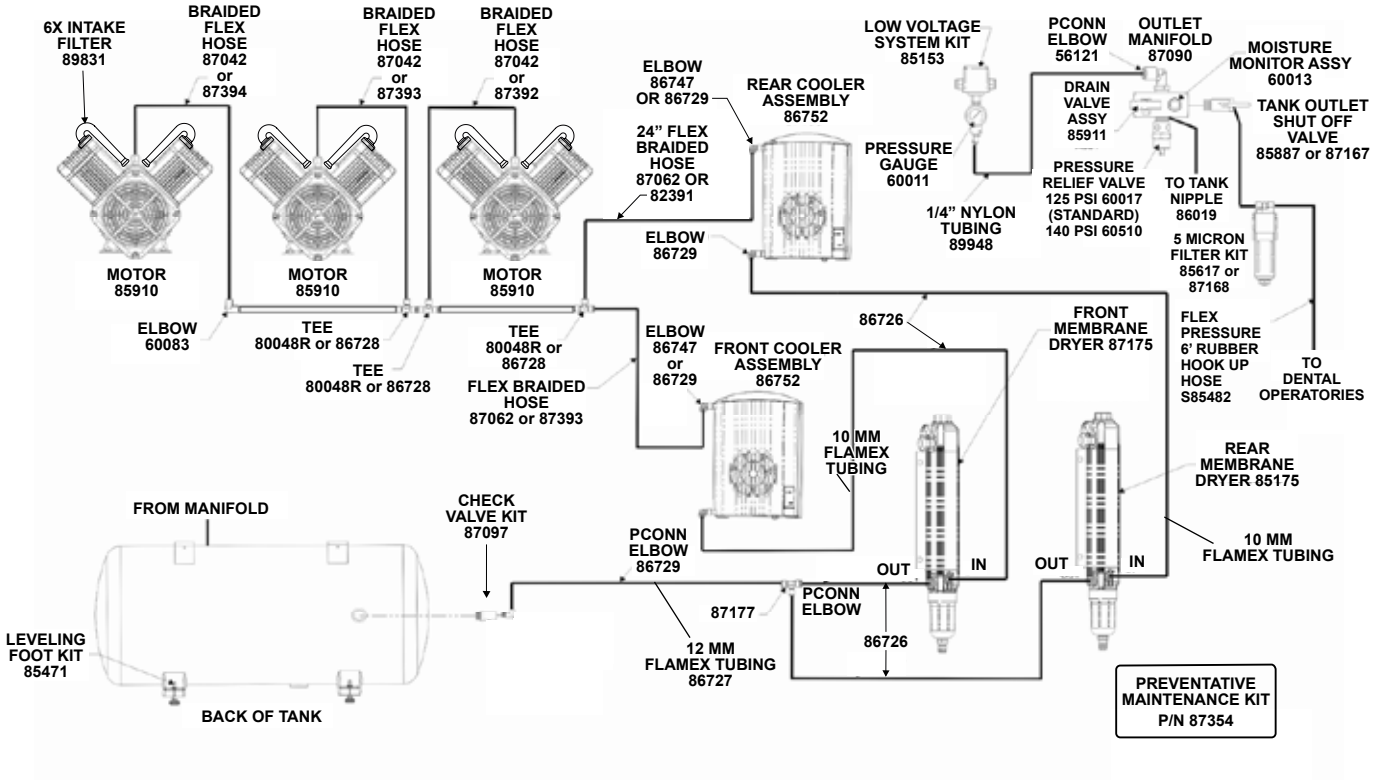

AirStar 70 with Membrane Dryer Electrical Breakdown

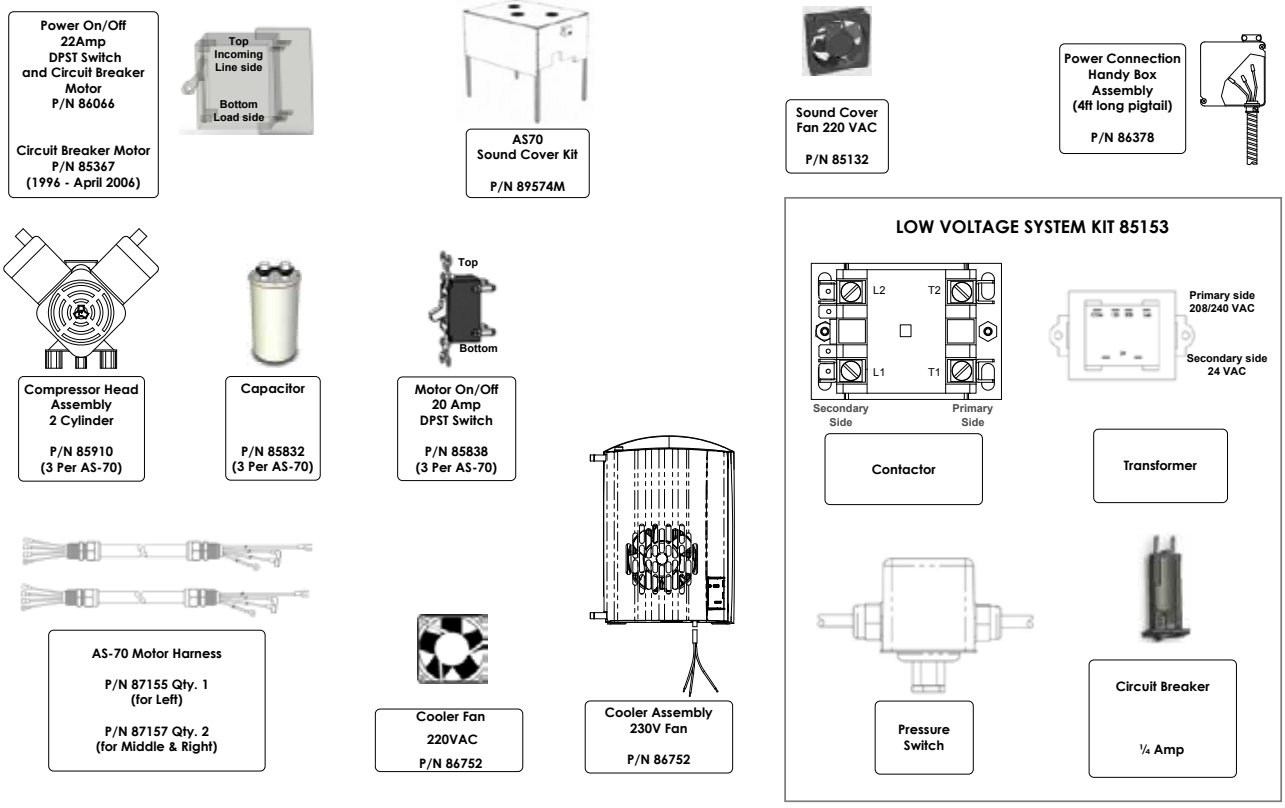

Part Number	Description	Price
AirStar® AS70 Parts Breakdown		
85887	Ball Valve; 1/2" NPT	$ 32.45
87167	Ball Valve; 3/8" NPT	$ 30.90
87062	Braided Hose; 10mm Push, 11-1/2" Overall Length	$ 80.03
87391	Braided Hose; 10mm Push, 16" Overall Length	$ 32.00
87392	Braided Hose; 10mm Push, 18" Overall Length	$ 33.00
87393	Braided Hose; 10mm Push, 21" Overall Length	$ 35.00
87394	Braided Hose; 10mm Push, 26" Overall Length	$ 37.00
87042	Braided Hose; Flare x 1/4" MNPT, 17-1/2" Overall Length	$ 75.71
87097	Check Valve Kit	$ 55.00
86752	Cooler Assembly	$ 254.10
85911	Drain Valve Assembly	$ 42.18
60083	Elbow; 1/4" FNPT	$ 8.00
56121	Elbow; 1/4" MNPT x 1/4 Push	$ 8.65
86729	Elbow; 10mm Push	$ 18.39
86747	Elbow; 10mm Push x 3/8" Push	$ 29.20
86749	Elbow; 12mm Push x 3/8" MBSPP	$ 42.18
58038	Elbow; 3/8" MNPT x 3/8" FNPT	$ 7.57
85617	Filter Kit; 5 Micron, 1/2" NPT	$ 329.00
86395	Tank Outlet 5 Micron Filter & Delivery Hose Replacement Kit, 3/8" NPT	$ 259.00
87168	Tank Outlet 5 Micron Filter, Replacement Filter Assembly Only, 3/8" NPT	$ 45.00
S85482	Hook-Up Hose Kit; 6' Length, 3/8" MNPT	$ 50.83
89831	Air Intake Filter Replacement: 1 P/Cylinder for all Airstar Solutions	$ 75.00
85471	Leveling Foot Kit (1 per Compressor)	$ 104.91
87175	Kit; Replacement Membrane Dryer	$ 1,136.69
87108	Membrane Dryer; Drain Tube and Drip Tray Kit	$ 55.16
60013	Moisture Monitor Assembly	$ 32.45
86019	Nipple, Tank to Outlet Manifold	$ 32.45
87090	Oulet Manifold Assembly AirStar21M, 22M, 30M, 50M, 70M	$ 107.12
60011	Pressure Gauge	$ 15.14
60017	Safety Relief Valve; 125 PSI	$ 48.67
60510	Safety Relief Valve; 140 PSI	$ 72.46
80048R	Tee; 1/4" FNPT	$ 10.82
86728	Tee; 10mm Push	$ 10.82
87177	Tee; 12mm Push	$ 43.26
89948	Tubing; 1/4" OD, Black	$ 7.57
86726	Tubing; Cooler to Membrane Dryer	$ 29.20
86727	Tubing; Membrane Dryer to Tank	$ 33.53
Electrical Breakdown		
85832	Capacitor (for 85910)	$ 66.95
86066	Circuit Breaker; 22A	$ 156.82
117690	Circuit Breaker 1/4 Amp (Low Voltage Circuit)	$ 24.02
85910	Compressor Head Assembly; AirStar 22/40/50/70, 2 Cyl, 220 VAC	$ 4,424.78
89345	Contactor 40 Amp Line Voltage with 24 VAC Coil	$ 208.73
87071-1	Cooler Assembly; 230V Fan	$ 36.77
85153	Kit, Low Voltage System, AS12, AS22, AS30, AS40, AS50 & AS70	$ 322.14
87155	Motor Harness (for left Compressor Head Assembly)	$ 103.82
87157	Motor Harness	$ 110.31
86378	Power Connection Assembly; AS70	$ 71.92
87176	Pressure Switch, 85 to 115 VAC	$ 73.65
89574M	Sound Cover for AS70	$ 4,445.00
85132	Sound Cover Fan	$ 180.61
85838	Switch; Toggle, 20A, 120 - 277	$ 35.69
89415	Thermal Switch; Sound Cover	$ 55.16
86637	Transformer, 208/230 VAC Step-down to 24 VAC	$ 73.54
Additional Items		
87134	Accessory Kit; AS70	$ 237.93
85003	Airstar Motor & Dryer Bypass Kit	$ 20.00
87354	Preventive Maintenance Kit for AS70 & AS70 NEO	$ 479.00
85494	Remote Air Intake Kit, AS70 / AS70 NEO	$ 449.00
67000-1	Buck/ Boost Transformer, 7.8 kVa	$ 1,779.00
60046	Tubing; 1/2" ID, Clear	$ 8.65
80184	Vibration Pad Kit (pkg/4)	$ 53.55

AirStar® 100 with Membrane Dryer Parts Breakdown

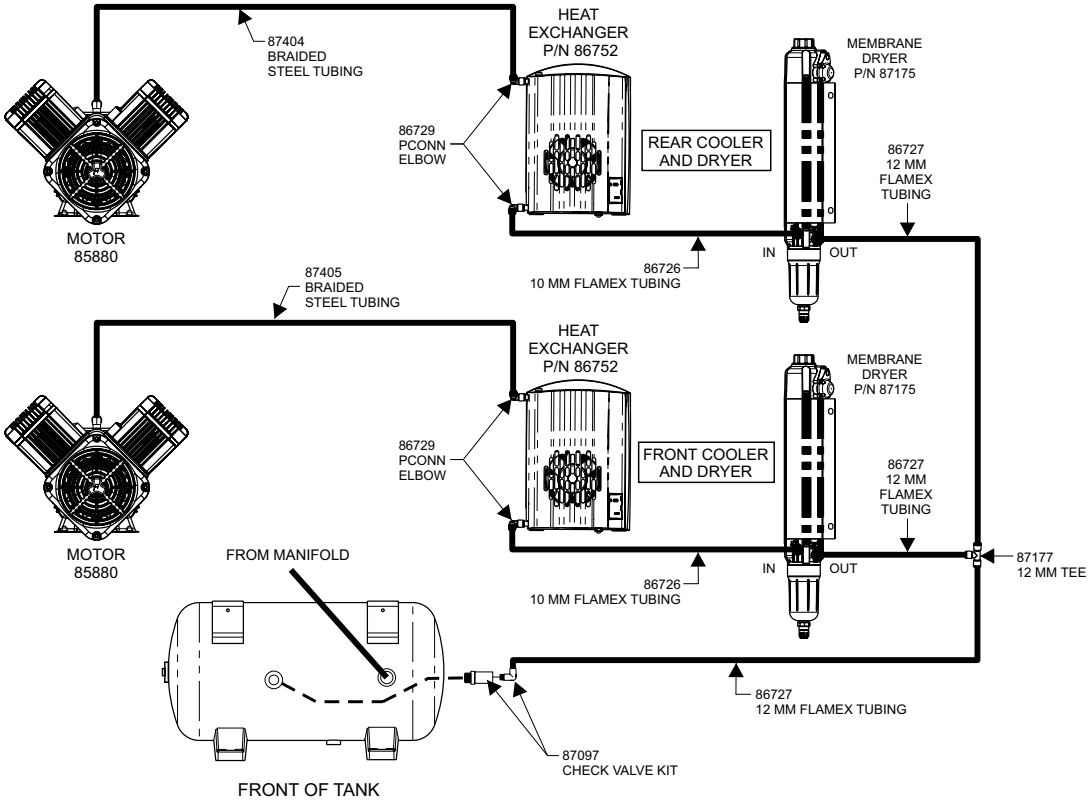

AirStar 100 with Membrane Dryer Electrical Breakdown

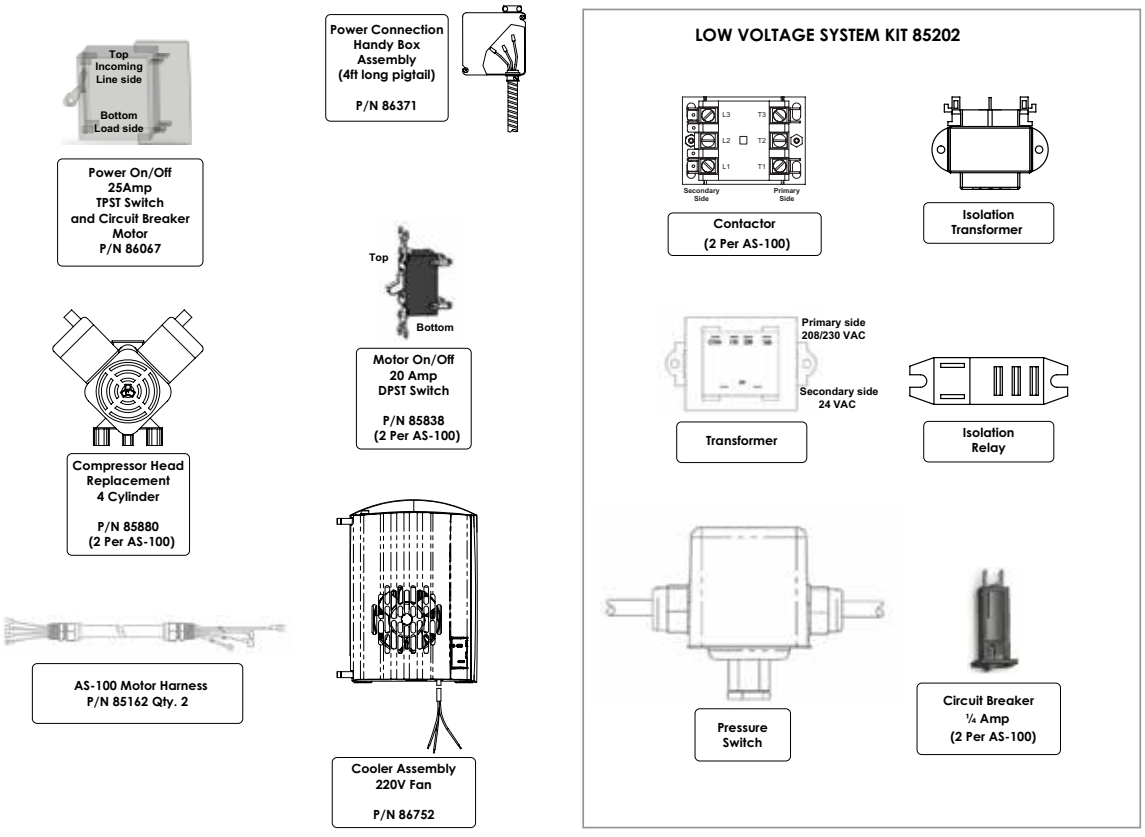

Part Number	Description		Price
AirStar® AS100 Parts Breakdown			
87167	Ball Valve; 3/8" NPT	$	30.90
87398	Braided Hose; 10mm Push, 13" Overall Length	$	71.00
87404	Hose Assenbly; Airstar, Braided Overall Length 14-1/4	$	74.00
87405	Braided Hose; 10mm Push, 49" Overall Length	$	139.00
87097	Check Valve Kit	$	55.00
86752	Cooler Assembly	$	254.10
85911	Drain Valve Assembly	$	42.18
86729	Elbow; 10mm Push	$	18.39
86747	Elbow; 10mm Push x 3/8" Push	$	29.20
58038	Elbow; 3/8" MNPT x 3/8" FNPT	$	7.57
86395	Tank Outlet 5 Micron Filter & Delivery Hose Replacement Kit, 3/8" NPT	$	259.00
87168	Tank Outlet 5 Micron Filter, Replacement Filter Assembly Only, 3/8" NPT	$	45.00
S85482	Hook-Up Hose Kit; 6' Length, 3/8" MNPT	$	50.83
89831	Air Intake Filter Replacement: 1 P/Cylinder for all Airstar Solutions	$	75.00
85471	Leveling Foot Kit (1 per Compressor)	$	104.91
87175	Kit; Replacement Membrane Dryer	$	1,136.69
87108	Membrane Dryer; Drain Tube and Drip Tray Kit	$	55.16
60013	Moisture Monitor Assembly	$	32.45
86019	Nipple, Tank to Outlet Manifold	$	32.45
87090	Oulet Manifold Assembly AirStar21M, 22M, 30M, 50M, 70M	$	107.12
60011	Pressure Gauge	$	15.14
60017	Safety Relief Valve; 125 PSI	$	48.67
60510	Safety Relief Valve; 140 PSI	$	72.46
86728	Tee; 10mm Push	$	10.82
87177	Tee; 12mm Push	$	43.26
86726	Tubing; Cooler to Membrane Dryer	$	29.20
86727	Tubing; Membrane Dryer to Tank	$	33.53
Electrical Breakdown			
86067	Circuit Breaker (Mains Disconnect)	$	139.00
117690	Circuit Breaker 1/4 Amp (Low Voltage Circuit)	$	24.02
85880	Replacement Compressor Head for AS100	$	7,825.00
54498	Contactor 3 Pole, 40amp, 24 Volt Coil	$	68.25
87071-1	Cooler Assembly; 230V Fan	$	36.77
85153	Kit, Low Voltage System, AS12, AS22, AS30, AS40, AS50 & AS70	$	322.14
85162	Motor Harness for AS100	$	89.00
86371	Power Connection Assembly for AS100	$	65.00
87176	Pressure Switch, 85 to 115 VAC	$	73.65
85838	Switch; Toggle, 20A, 120 - 277	$	35.69
86637	Transformer, 208/230 VAC Step-down to 24 VAC	$	73.54
85934	Isolation Transformer	$	47.50
419615	Isolation Relay	$	25.00
Additional Items			
87134	Accessory Kit; AS100	$	237.93
85003	Airstar Motor & Dryer Bypass Kit	$	20.00
87356	Preventative Maintenance Kit for AS100	$	659.00
85511	Remote Air Intake Kit for AS100	$	469.00
60046	Tubing; 1/2" ID, Clear	$	8.65
80184	Vibration Pad Kit (pkg/4)	$	53.55

AirStar® Membrane Dryer Parts Breakdown

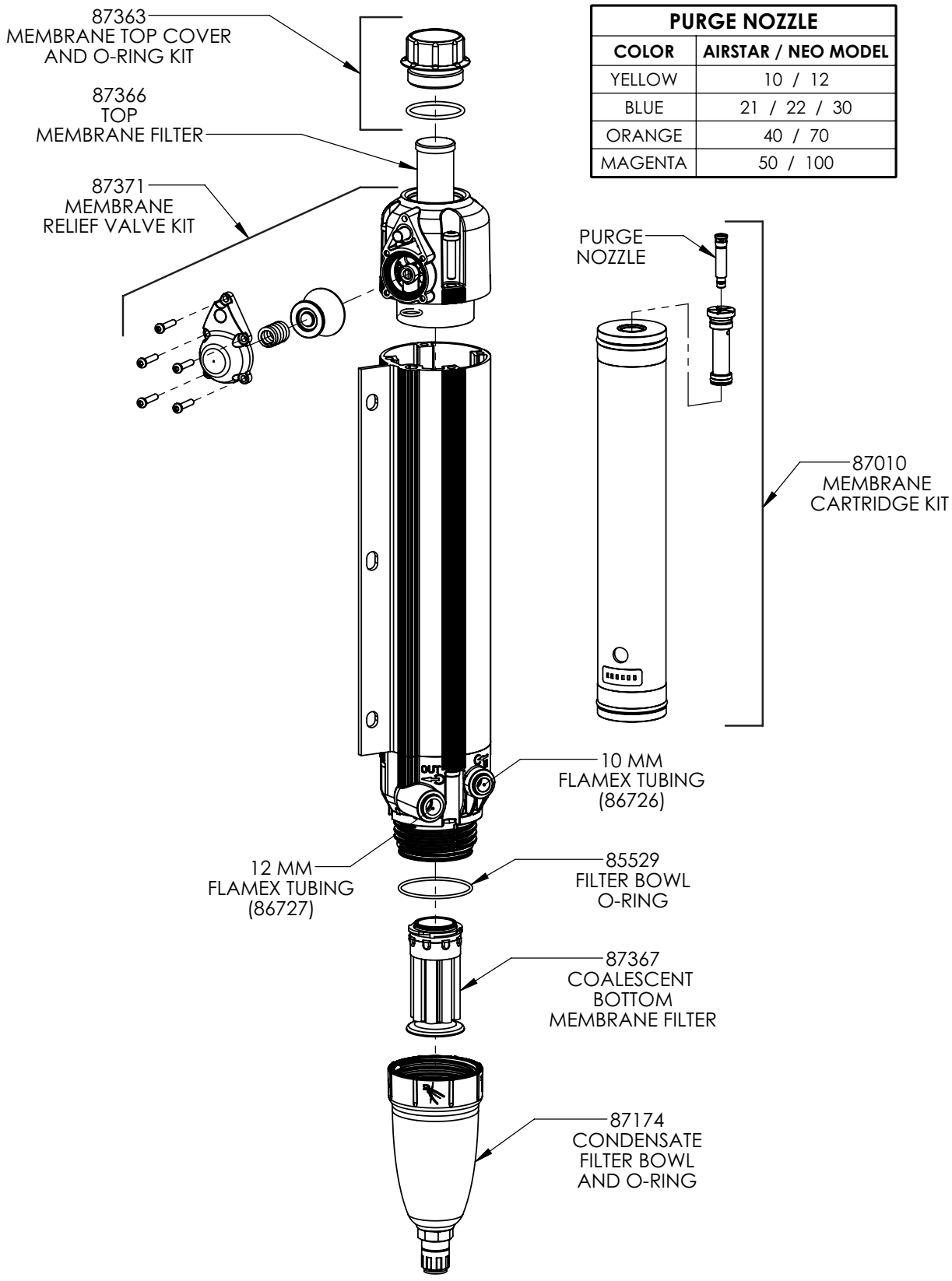

PURGE NOZZLE	
COLOR	**AIRSTAR / NEO MODEL**
YELLOW	10 / 12
BLUE	21 / 22 / 30
ORANGE	40 / 70
MAGENTA	50 / 100

Part Number 87175

Air Compressors with Membrane Dryer

Part Number	Description		Price
Membrane Dryer Parts Breakdown			
87367	Filter; Membrane Dryer, Bottom	$	19.00
87366	Filter; Membrane Dryer, Top	$	42.59
87174	Membrane Dryer; Bowl	$	55.16
85529	Membrane Dryer; Bowl O-Ring	$	5.41
87364	Membrane Dryer; Cap	$	7.57
87363	Membrane Dryer; Cap Kit	$	16.22
87368	Membrane Dryer; Cap O-Ring	$	5.41
87010	Membrane Dryer; Cartridge Replacement Kit	$	606.67
54509	Membrane Dryer; Drain Tube Only, 10MM OD Polyurethane, Per Foot	$	7.57
87105	Membrane Dryer; Drip Tray Only	$	00.00
87371	Membrane Dryer; Relief Valve	$	92.70
Preventative Maintenance Kits			
87351	Preventative Maintenance Kit for AS10/ AS10 NEO & AS12	$	109.00
87352	Preventative Maintenance Kit for AS21/ AS21 NEO, AS22 / AS22 NEO & AS30 / AS30 NEO	$	179.00
87355	Preventative Maintenance Kit for AS40 & AS40 NEO	$	249.00
87353	Preventative Maintenance Kit for AS50 & AS50 NEO	$	339.00
87354	Preventative Maintenance Kit for AS70 & AS70 NEO	$	479.00
87356	Preventative Maintenance Kit for AS100	$	659.00
Membrane Dryer Maintenance Kits Include:			
87367	Filter; Membrane Dryer, Bottom	$	19.00
87366	Filter; Membrane Dryer, Top	$	42.59
89831	Air Intake Filter Replacement: 1 P/Cylinder for all Airstar Solutions	$	75.00
85529	Membrane Dryer; Bowl O-Ring	$	5.41
87368	Membrane Dryer; Cap O-Ring	$	5.41
Sound Reducer Kits			
86272	Intake Air Sound Damper Kit; AS10/ AS10 NEO & AS12	$	237.30
86273	Intake Air Sound Damper Kit; AS21/ AS21 NEO, AS22 / AS22 NEO & AS30 / AS30 NEO	$	389.34
86274	Intake Air Sound Damper Kit; AS50 & AS50 NEO	$	521.28
86275	Intake Air Sound Damper Kit; AS70 & AS70 NEO	$	666.20
86278	Intake Air Sound Damper Kit; AS100	$	00.00
Accessories			
87175	Kit; Replacement Membrane Dryer*	$	1,136.69
87108	Membrane Dryer; Drain Tube and Drip Tray Kit*	$	55.16
85003	Airstar Motor & Dryer Bypass Kit*	$	20.00
85694	AirStar Tandem Installation Kit	$	389.00
80184	Vibration Pad Kit (pkg/4)	$	53.55
60072	Buck/Boost Transformer, 3.9 kVa	$	819.20
67000-1	Buck/Boost Transformer, 7.8 kVa	$	1,779.00
85480	Electrical Hook-Up Cable	$	85.44
S85482	Hook-Up Hose Kit; 6' Length, 3/8" MNPT	$	50.83
85471	Leveling Foot Kit (1 Per Compressor)	$	104.91
85510	Kit; Milling Machine Upgrade, AirStar Compressor	$	69.00
56600	Utility Mini Stack Rack for units up to AS30, Mojave V5, VacStar 50/50H & Acadia	$	1,189.00
56650	Utility XL Stack Rack for AS 50/70, Mojave 2V3/2V5, VacStar 80/80H & Acadia	$	1,429.00

* AirStar 70 & AirStar 100 has a Qty of 2

AirStar® 10 with Desiccant Dryer Parts Breakdown

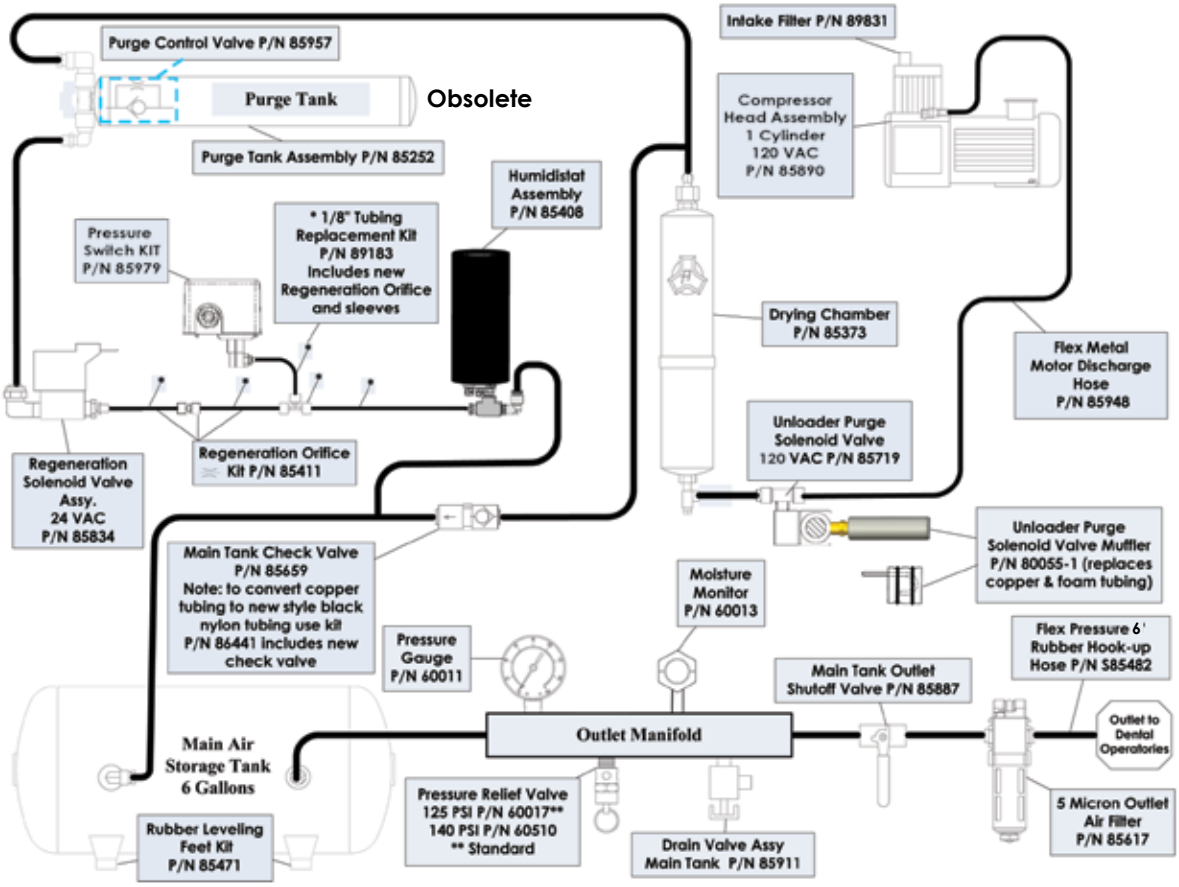

AirStar 10 with Desiccant Dryer Electrical Breakdown

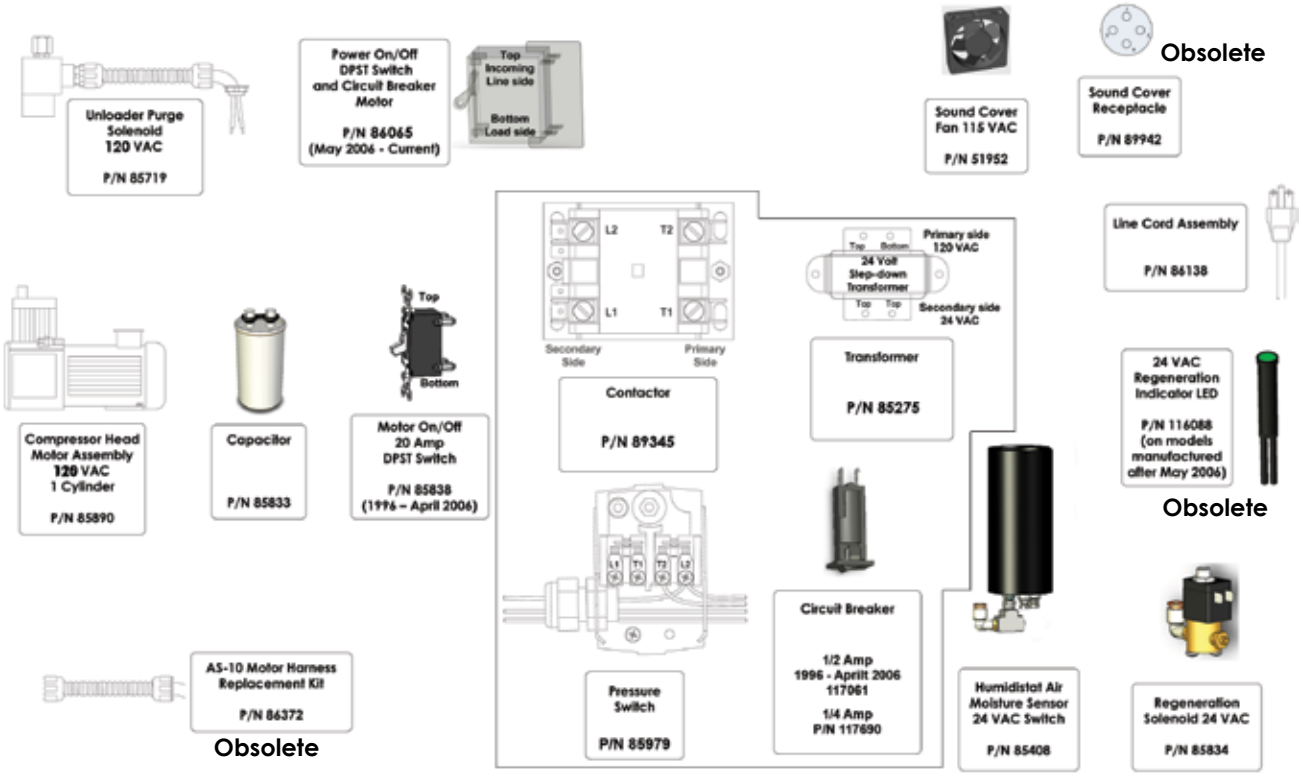

Part Number	Description		Price
AirStar® AS10/AS10C Parts Breakdown			
85887	Ball Valve; 1/2" NPT	$	32.45
85948	Braided Hose; Flare x 1/4" MNPT, 31-1/2" Overall Length	$	273.62
85659	Check Valve; 1/4" FNPT Brass	$	70.30
86441	Kit; Check Valve Replacement, AS1	$	259.00
85890	Compressor Head Assembly; AirStar, 1 Cyl, 120 VAC	$	3,435.73
85911	Drain Valve Assembly	$	42.18
85373	Drying Chamber	$	632.35
85617	Filter Kit; 5 Micron, 1/2" NPT	$	329.00
S85482	Hook-Up Hose Kit; 6' Length, 3/8" MNPT	$	50.83
85408	Humidistat Assembly	$	718.62
89831	Air Intake Filter Replacement: 1 P/Cylinder for all Airstar Solutions	$	75.00
85471	Leveling Foot Kit (1 per Compressor)	$	104.91
60013	Moisture Monitor Assembly	$	32.45
85769	Outlet Manifold Assembly	$	227.12
60011	Pressure Gauge	$	15.14
85979	Pressure Switch Replacement Kit	$	138.23
85957	Purge Control Valve	$	158.98
85252	Purge Tank Assembly		Obsolete
85411	Regeneration Orifice Kit	$	64.89
85834	Regeneration Solenoid Valve Assembly	$	227.12
60017	Safety Relief Valve; 125 PSI	$	48.67
60510	Safety Relief Valve; 140 PSI	$	72.46
89183	Tubing; 1/8", Replacement Kit (Includes new Regeneration Orifice and sleeves)	$	30.28
85719	Unloader Purge Solenoid Valve	$	245.50
80055-1	Unloader Purge Solenoid Valve Muffler (replaces copper & foam tubing)	$	70.30
Electrical Breakdown			
85833	Capacitor; 65UF, 370VAC, 2-1/2" DI	$	82.19
117061	Circuit Breaker Low Voltage, 24 VAC, 1/2 Amp	$	23.10
117690	Circuit Breaker 1/4 Amp (Low Voltage Circuit)	$	24.02
86065	Circuit Breaker; 10A	$	126.54
85890	Compressor Head Assembly; AirStar 10, 1 Cyl, 120 VAC	$	3,435.73
89345	Contactor 40 Amp Line Voltage with 24 VAC Coil	$	208.73
85408	Humidistat Assembly	$	718.62
86138	Line Cord Assembly 115 VAC	$	195.75
86372	Motor Harness		Obsolete
116088	Regeneration Indicator; 24 VAC LED (on models manufactured after May 2006)		Obsolete
85834	Regeneration Solenoid Valve Assembly	$	227.12
85961	Sound Cover		Obsolete
51952	Sound Cover Fan	$	86.52
89942	Sound Cover Receptacle		Obsolete
85838	Switch; Toggle, 20A, 120 - 277	$	35.69
85275	Transformer Assembly; 115/24V	$	193.59
85719	Unloader Purge Solenoid Valve	$	245.50
Additional Items			
85491	Remote Air Intake Kit, AS10 / AS10 NEO, AS12	$	369.00
80183	Vibration Pad	$	55.16

AirStar® 21 with Desiccant Dryer Parts Breakdown

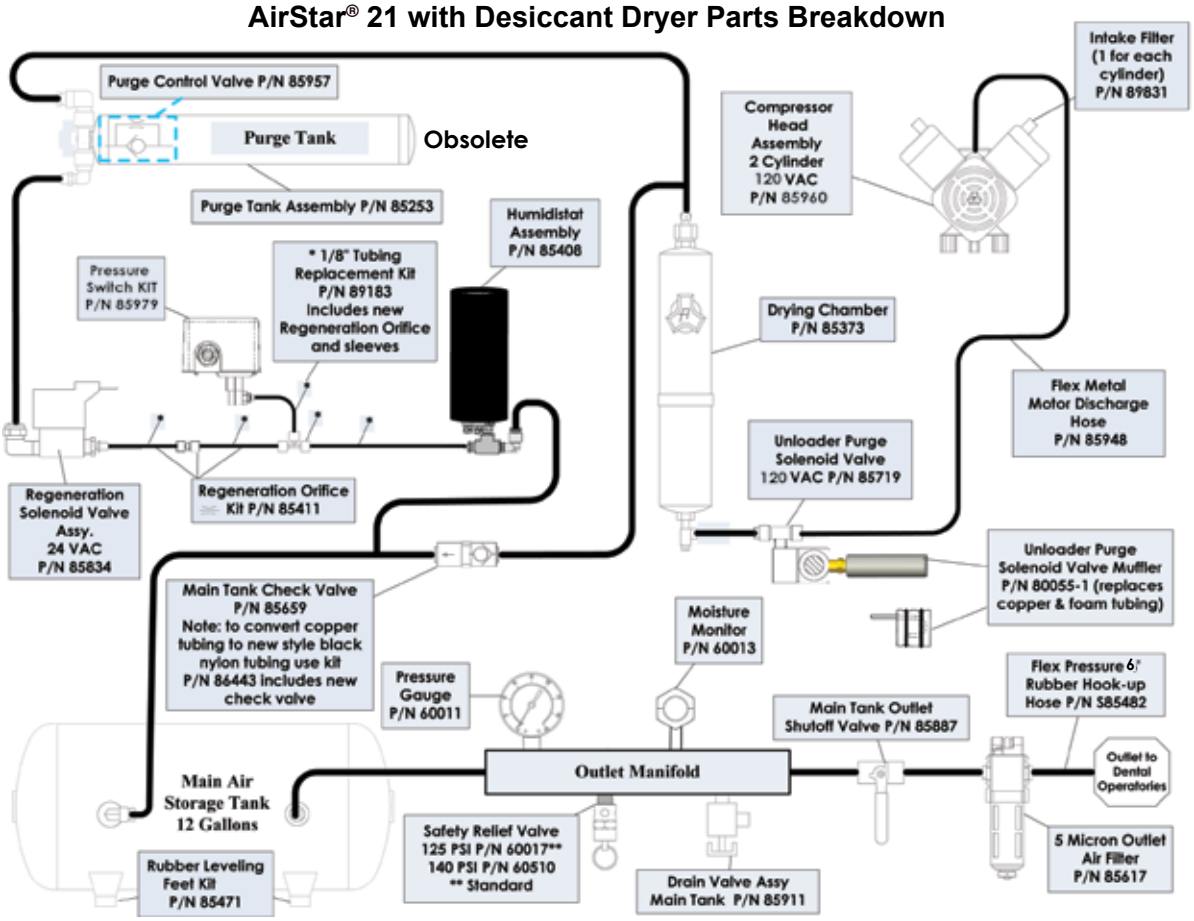

AirStar 21 with Desiccant Dryer Electrical Breakdown

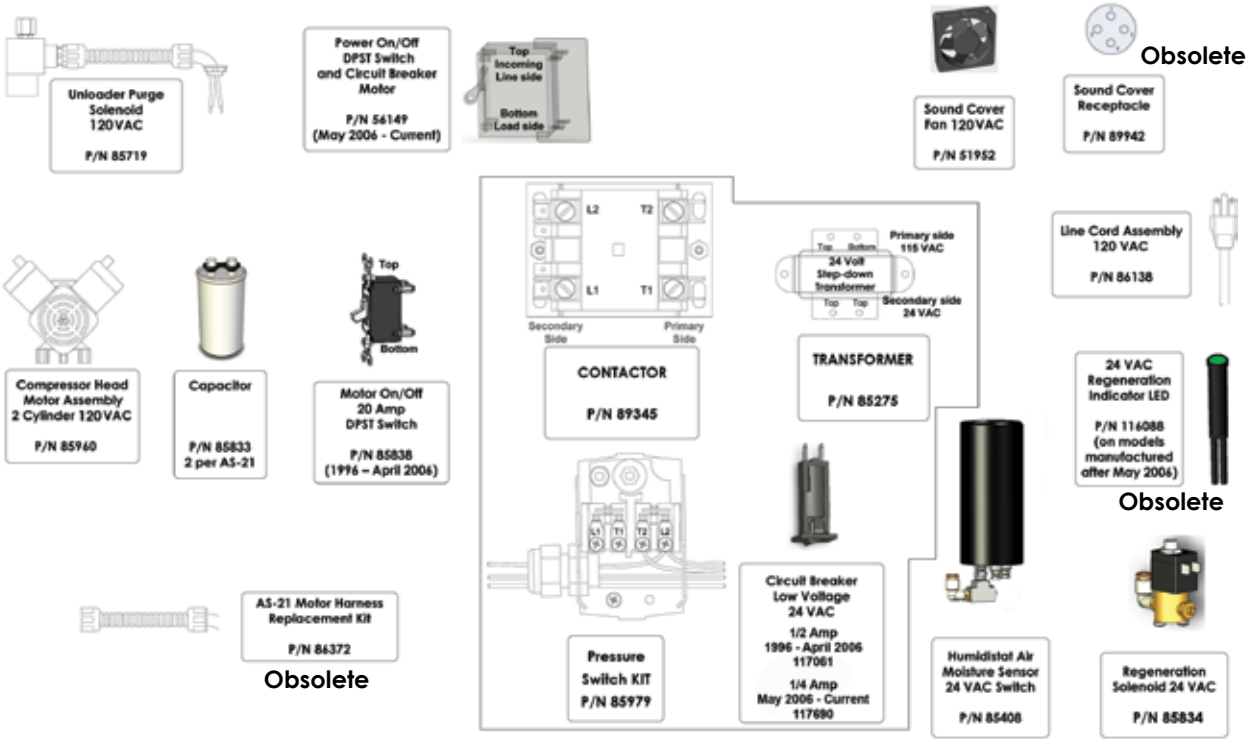

Part Number	Description		Price
AirStar® AS21/AS21C Parts Breakdown			
85887	Ball Valve; 1/2" NPT	$	32.45
85948	Braided Hose; Flare x 1/4" MNPT, 31-1/2" Overall Length	$	273.62
85659	Check Valve; 1/4" FNPT Brass	$	70.30
86443	Check Valve Kit	$	279.85
85960	Compressor Head Assembly; AirStar, 2 Cyl, 120 VAC	$	4,424.78
85911	Drain Valve Assembly	$	42.18
85373	Drying Chamber	$	632.35
85617	Filter Kit; 5 Micron, 1/2" NPT	$	329.00
S85482	Hook-Up Hose Kit; 6' Length, 3/8" MNPT	$	50.83
85408	Humidistat Assembly	$	697.69
89831	Air Intake Filter Replacement: 1 P/Cylinder for all Airstar Solutions	$	75.00
85471	Leveling Foot Kit (1 per Compressor)	$	104.91
60013	Moisture Monitor Assembly	$	32.45
85769	Outlet Manifold Assembly	$	227.12
60011	Pressure Gauge	$	15.14
85979	Pressure Switch Replacement Kit	$	138.23
85957	Purge Control Valve	$	158.98
85253	Purge Tank Assembly		Obsolete
85411	Regeneration Orifice Kit	$	64.89
85834	Regeneration Solenoid Valve Assembly	$	227.12
60017	Safety Relief Valve; 125 PSI	$	48.67
60510	Safety Relief Valve; 140 PSI	$	72.46
89948	Tubing; 1/4" OD, Black	$	7.57
89183	Tubing; 1/8", Replacement Kit (Includes new Regeneration Orifice and sleeves)	$	30.40
89955	Tubing; 3/8" ID, Black	$	7.64
85719	Unloader Purge Solenoid Valve	$	245.50
80055-1	Unloader Purge Solenoid Valve Muffler (replaces copper & foam tubing)	$	70.30
Electrical Breakdown			
85833	Capacitor; 65UF, 370VAC, 2-1/2" DI	$	82.19
117061	Circuit Breaker Low Voltage, 24 VAC, 1/2 Amp	$	23.10
117690	Circuit Breaker 1/4 Amp (Low Voltage Circuit)	$	24.02
56149	Circuit Breaker; 16A	$	116.80
85960	Compressor Head Assembly; AirStar 21, 2 Cyl, 120 VAC	$	4,424.78
89345	Contactor 40 Amp Line Voltage with 24 VAC Coil	$	208.73
85408	Humidistat Assembly	$	697.69
86138	Line Cord Assembly 115 VAC	$	195.75
86372	Motor Harness		Obsolete
116088	Regeneration Indicator; 24 VAC LED (on models manufactured after May 2006)		Obsolete
85834	Regeneration Solenoid Valve Assembly	$	227.12
51952	Sound Cover Fan	$	86.52
89942	Sound Cover Receptacle		Obsolete
85838	Switch; Toggle, 20A, 120 - 277	$	35.69
85275	Transformer Assembly; 115/24V	$	193.59
85719	Unloader Purge Solenoid Valve	$	245.50
Additional Items			
85492	Remote Air Intake Kit, AS21 / AS21 NEO, AS22 / AS22 NEO, AS30 / AS30 NEO	$	389.00
80183	Vibration Pad	$	55.16

AirStar® 22 with Desiccant Dryer Parts Breakdown

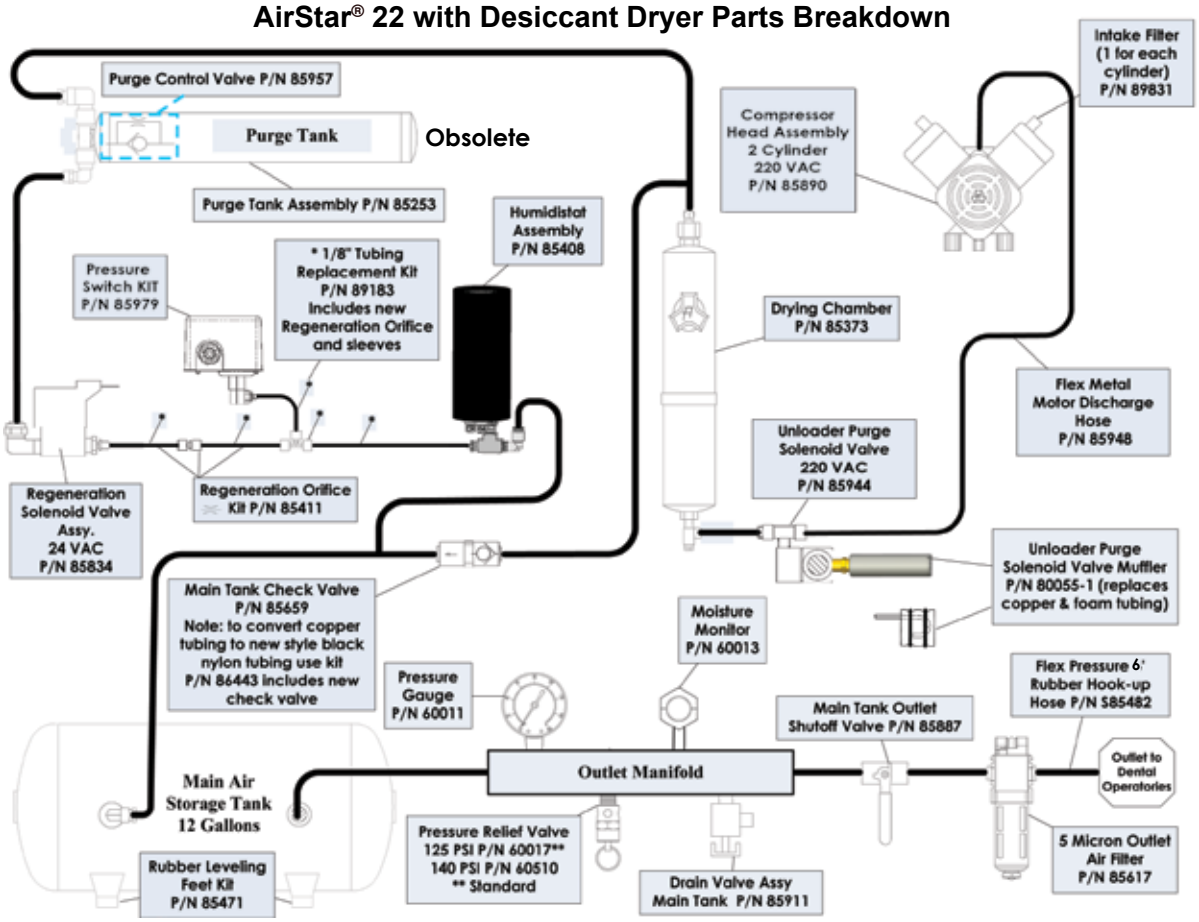

AirStar 22 with Desiccant Dryer Electrical Breakdown

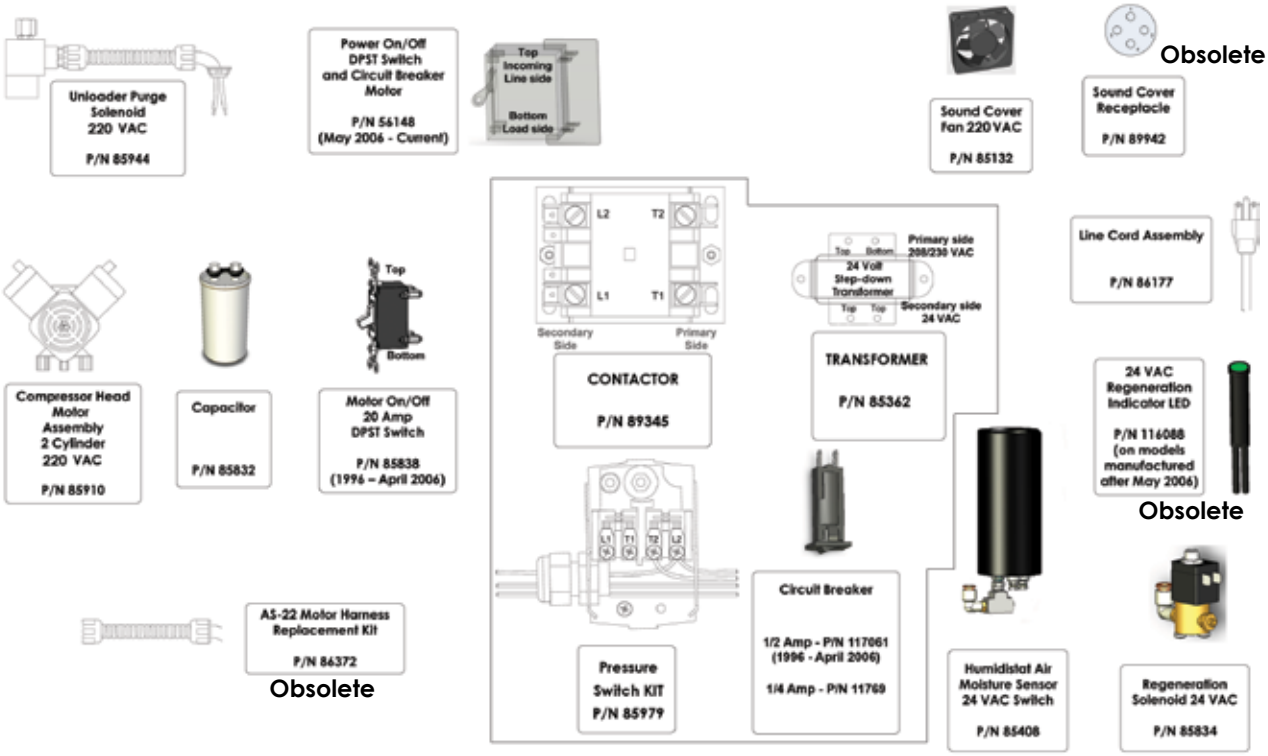

Part Number	Description		Price
AirStar® AS22/AS22C Parts Breakdown			
85887	Ball Valve; 1/2" NPT	$	32.45
85948	Braided Hose; Flare x 1/4" MNPT, 31-1/2" Overall Length	$	273.62
85659	Check Valve; 1/4" FNPT Brass	$	70.30
86443	Check Valve Kit	$	279.85
85910	Compressor Head Assembly; AirStar 22/40/50/70, 2 Cyl, 220 VAC	$	4,424.78
85911	Drain Valve Assembly	$	42.18
85373	Drying Chamber	$	632.35
85617	Filter Kit; 5 Micron, 1/2" NPT	$	329.00
S85482	Hook-Up Hose Kit; 6' Length, 3/8" MNPT	$	50.83
85408	Humidistat Assembly	$	697.69
89831	Air Intake Filter Replacement: 1 P/Cylinder for all Airstar Solutions	$	75.00
85471	Leveling Foot Kit (1 per Compressor)	$	104.91
60013	Moisture Monitor Assembly	$	32.45
85769	Outlet Manifold Assembly	$	227.12
60011	Pressure Gauge	$	15.14
85979	Pressure Switch Replacement Kit	$	138.23
85957	Purge Control Valve	$	158.98
85253	Purge Tank Assembly		Obsolete
85411	Regeneration Orifice Kit	$	64.89
85834	Regeneration Solenoid Valve Assembly	$	227.12
60017	Safety Relief Valve; 125 PSI	$	48.67
60510	Safety Relief Valve; 140 PSI	$	72.46
89183	Tubing; 1/8", Replacement Kit (Includes new Regeneration Orifice and sleeves)	$	30.28
80055-1	Unloader Purge Solenoid Valve Muffler (replaces copper & foam tubing)	$	70.30
Electrical Breakdown			
85832	Capacitor (for 85910)	$	66.95
117061	Circuit Breaker Low Voltage, 24 VAC, 1/2 Amp	$	23.10
117690	Circuit Breaker 1/4 Amp (Low Voltage Circuit)	$	24.02
56148	Circuit Breaker; 8A	$	116.80
85910	Compressor Head Assembly; AirStar 22/40/50/70, 2 Cyl, 220 VAC	$	4,424.78
89345	Contactor 40 Amp Line Voltage with 24 VAC Coil	$	208.73
85408	Humidistat Assembly	$	697.69
86177	Line Cord Assembly; 230V, AS22 & AS30	$	137.35
86372	Motor Harness		Obsolete
116088	Regeneration Indicator; 24 VAC LED (on models manufactured after May 2006)		Obsolete
85834	Regeneration Solenoid Valve Assembly	$	227.12
85132	Sound Cover Fan	$	180.61
89942	Sound Cover Receptacle		Obsolete
85838	Switch; Toggle, 20A, 120 - 277	$	35.69
85362	Transformer Assembly; 230/24V	$	193.59
85944	Unloader Purge Solenoid Valve	$	285.49
Additional Items			
85492	Remote Air Intake Kit, AS21 / AS21 NEO, AS22 / AS22 NEO, AS30 / AS30 NEO	$	389.00
67002	Buck/ Boost Transformer, 3.9 kVa	$	819.00
80183	Vibration Pad	$	55.16

AirStar® 30 with Desiccant Dryer Parts Breakdown

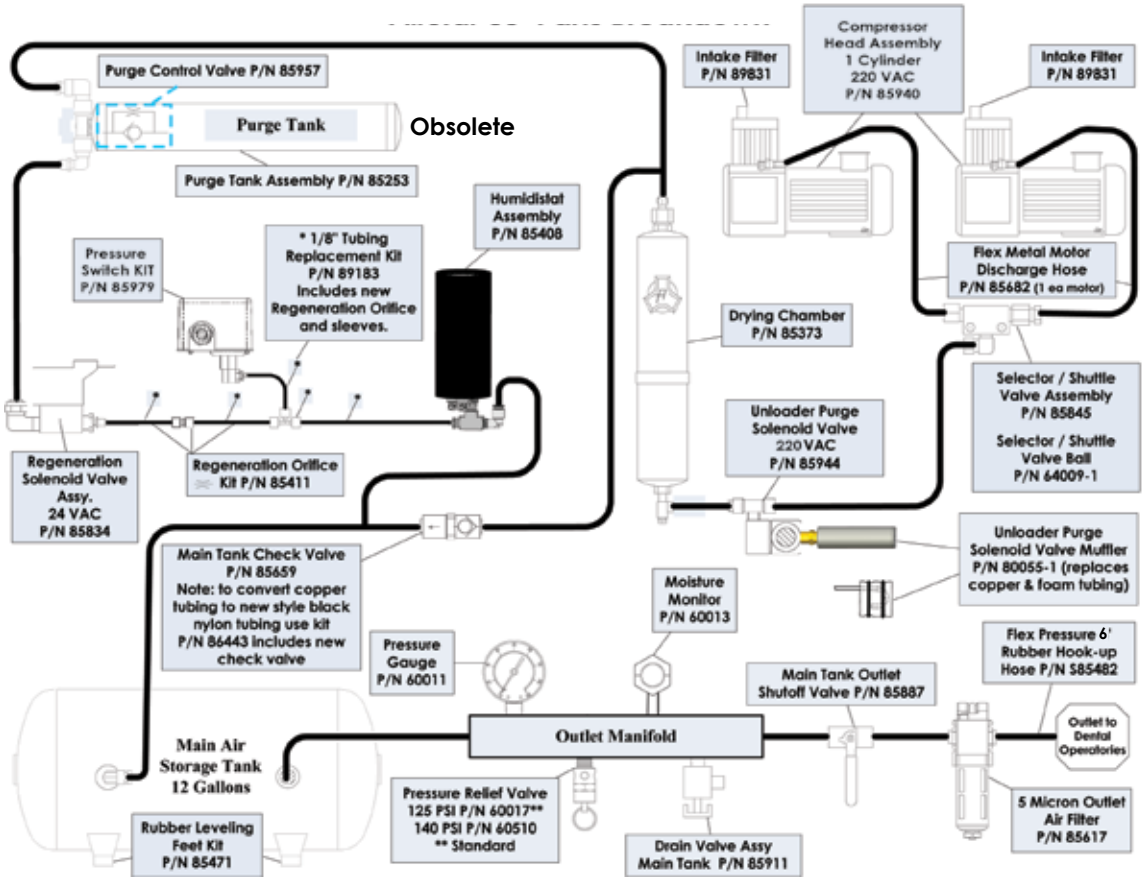

AirStar 30 with Desiccant Dryer Electrical Breakdown

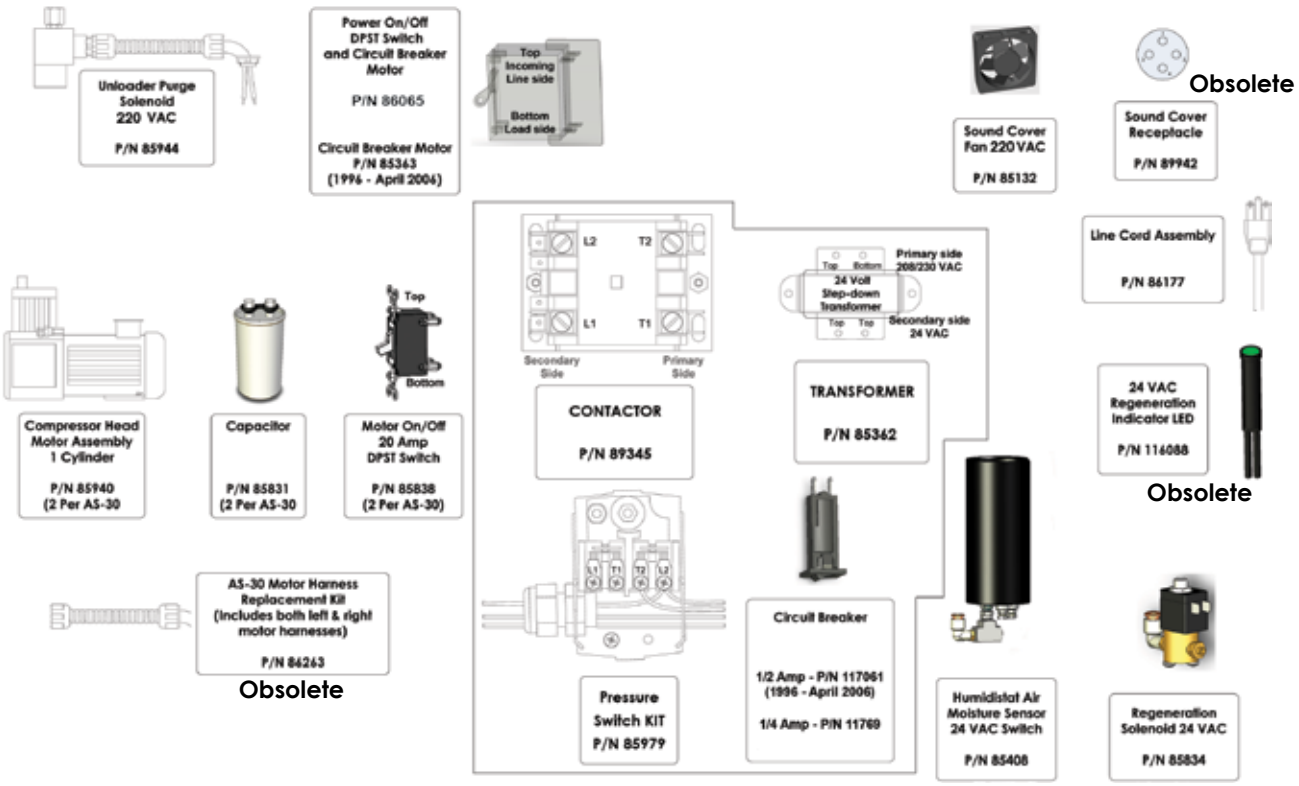

Part Number	Description		Price
AirStar® AS30/AS30C Parts Breakdown			
85887	Ball Valve; 1/2" NPT	$	32.45
85682	Braided Hose; Flare x 1/4" MNPT, 20" Overall Length	$	95.17
85659	Check Valve; 1/4" FNPT Brass	$	70.30
86443	Check Valve Kit	$	279.85
85911	Drain Valve Assembly	$	42.18
85373	Drying Chamber	$	632.35
85617	Filter Kit; 5 Micron, 1/2" NPT	$	329.00
S85482	Hook-Up Hose Kit; 6' Length, 3/8" MNPT	$	50.83
85408	Humidistat Assembly	$	697.69
89831	Air Intake Filter Replacement: 1 P/Cylinder for all Airstar Solutions	$	75.00
85471	Leveling Foot Kit (1 per Compressor)	$	104.91
60013	Moisture Monitor Assembly	$	32.45
85769	Outlet Manifold Assembly	$	227.12
60011	Pressure Gauge	$	15.14
85979	Pressure Switch Replacement Kit	$	138.23
85957	Purge Control Valve	$	158.98
85253	Purge Tank Assembly		Obsolete
85411	Regeneration Orifice Kit	$	64.89
85834	Regeneration Solenoid Valve Assembly	$	227.12
60017	Safety Relief Valve; 125 PSI	$	48.67
60510	Safety Relief Valve; 140 PSI	$	72.46
85845	Selector / Shuttle Valve Assembly	$	203.32
64009-1	Selector / Shuttle Valve Ball	$	19.95
89183	Tubing; 1/8", Replacement Kit (Includes new Regeneration Orifice and sleeves)	$	30.28
80055-1	Unloader Purge Solenoid Valve Muffler (replaces copper & foam tubing)	$	70.30
Electrical Breakdown			
85831	Capacitor (for 85940)	$	35.69
117061	Circuit Breaker Low Voltage, 24 VAC, 1/2 Amp	$	23.10
117690	Circuit Breaker 1/4 Amp (Low Voltage Circuit)	$	24.02
85363	Circuit Breaker; 2 Pole, 250V, 50/	$	156.82
86065	Circuit Breaker; 10A	$	126.54
85940	Compressor Head Assembly; AirStar 12/30/40, 1 Cyl, 220 VAC	$	3,435.73
89345	Contactor 40 Amp Line Voltage with 24 VAC Coil	$	208.73
85408	Humidistat Assembly	$	697.69
86177	Line Cord Assembly; 230V, AS22 & AS30	$	137.35
86263	Motor Harness		Obsolete
116088	Regeneration Indicator; 24 VAC LED (on models manufactured after May 2006)		Obsolete
85834	Regeneration Solenoid Valve Assembly	$	227.12
85132	Sound Cover Fan	$	180.61
89942	Sound Cover Receptacle		Obsolete
85838	Switch; Toggle, 20A, 120 - 277	$	35.69
85362	Transformer Assembly; 230/24V	$	193.59
85944	Unloader Purge Solenoid Valve	$	285.49
Additional Items			
85492	Remote Air Intake Kit, AS21 / AS21 NEO, AS22 / AS22 NEO, AS30 / AS30 NEO	$	389.00
67002	Buck/ Boost Transformer, 3.9 kVa	$	819.00
80183	Vibration Pad	$	55.16

AirStar® 50 with Desiccant Dryer Parts Breakdown

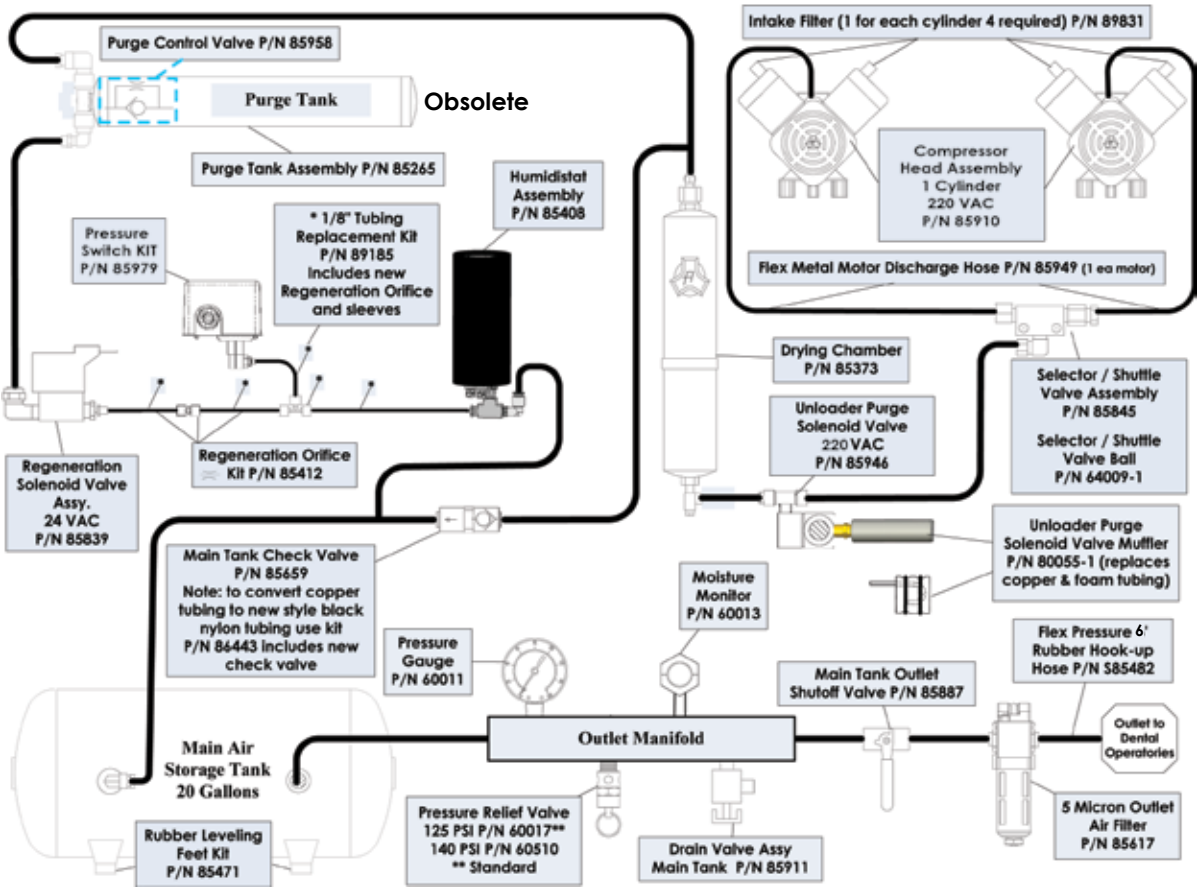

AirStar 50 with Desiccant Dryer Electrical Breakdown

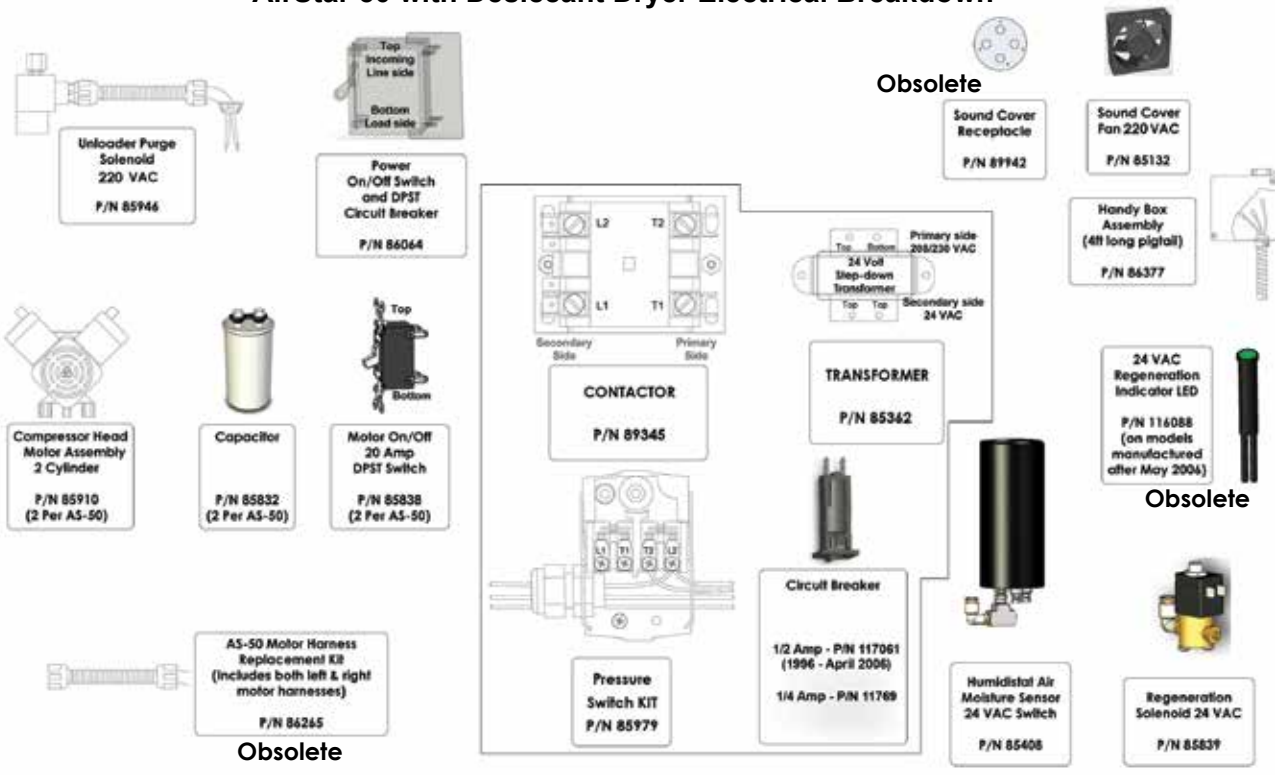

Part Number	Description		Price
AirStar® AS50/AS50C Parts Breakdown			
85887	Ball Valve; 1/2" NPT	$	32.45
85949	Braided Hose; Flare x 1/4" MNPT, 26-1/2" Overall Length	$	208.73
85659	Check Valve; 1/4" FNPT Brass	$	70.30
86443	Check Valve Kit	$	279.85
85911	Drain Valve Assembly	$	42.18
85373	Drying Chamber	$	632.35
85617	Filter Kit; 5 Micron, 1/2" NPT	$	329.00
S85482	Hook-Up Hose Kit; 6' Length, 3/8" MNPT	$	50.83
85408	Humidistat Assembly	$	697.69
89831	Air Intake Filter Replacement: 1 P/Cylinder for all Airstar Solutions	$	75.00
85471	Leveling Foot Kit (1 per Compressor)	$	104.91
60013	Moisture Monitor Assembly	$	32.45
85769	Outlet Manifold Assembly	$	227.12
60011	Pressure Gauge	$	15.14
85979	Pressure Switch Replacement Kit	$	138.23
85958	Purge Control Valve	$	173.04
85412	Regeneration Orifice Kit	$	60.56
85839	Regeneration Solenoid Valve Assembly	$	227.12
60017	Safety Relief Valve; 125 PSI	$	48.67
60510	Safety Relief Valve; 140 PSI	$	72.46
64009-1	Selector / Shuttle Valve Ball	$	19.95
85845	Selector / Shuttle Valve Assembly	$	203.32
89185	Tubing; 1/8", Replacement Kit (Includes new Regeneration Orifice and sleeves)	$	55.16
80055-1	Unloader Purge Solenoid Valve Muffler (replaces copper & foam tubing)	$	70.30
Electrical Breakdown			
85832	Capacitor (for 85910)	$	66.95
117061	Circuit Breaker Low Voltage, 24 VAC, 1/2 Amp	$	23.10
117690	Circuit Breaker 1/4 Amp (Low Voltage Circuit)	$	24.02
86064	Circuit Breaker; 15A	$	156.82
85910	Compressor Head Assembly; AirStar 22/40/50/70, 2 Cyl, 220 VAC	$	4,424.78
89345	Contactor 40 Amp Line Voltage with 24 VAC Coil	$	208.73
85408	Humidistat Assembly	$	697.69
86265	Motor Harness		Obsolete
86377	Power Connection Assembly; AS50	$	71.92
116088	Regeneration Indicator; 24 VAC LED (on models manufactured after May 2006)		Obsolete
85839	Regeneration Solenoid Valve Assembly	$	227.12
85132	Sound Cover Fan	$	180.61
89942	Sound Cover Receptacle		Obsolete
85838	Switch; Toggle, 20A, 120 - 277	$	35.69
85362	Transformer Assembly; 230/24V	$	193.59
85946	Unloader Purge Solenoid Valve	$	285.49
Additional Items			
85493	Remote Air Intake Kit, AS50 / AS50 NEO	$	429.00
67002	Buck/ Boost Transformer, 3.9 kVa	$	819.00
80183	Vibration Pad	$	55.16

AirStar® 70 with Desiccant Dryer Parts Breakdown

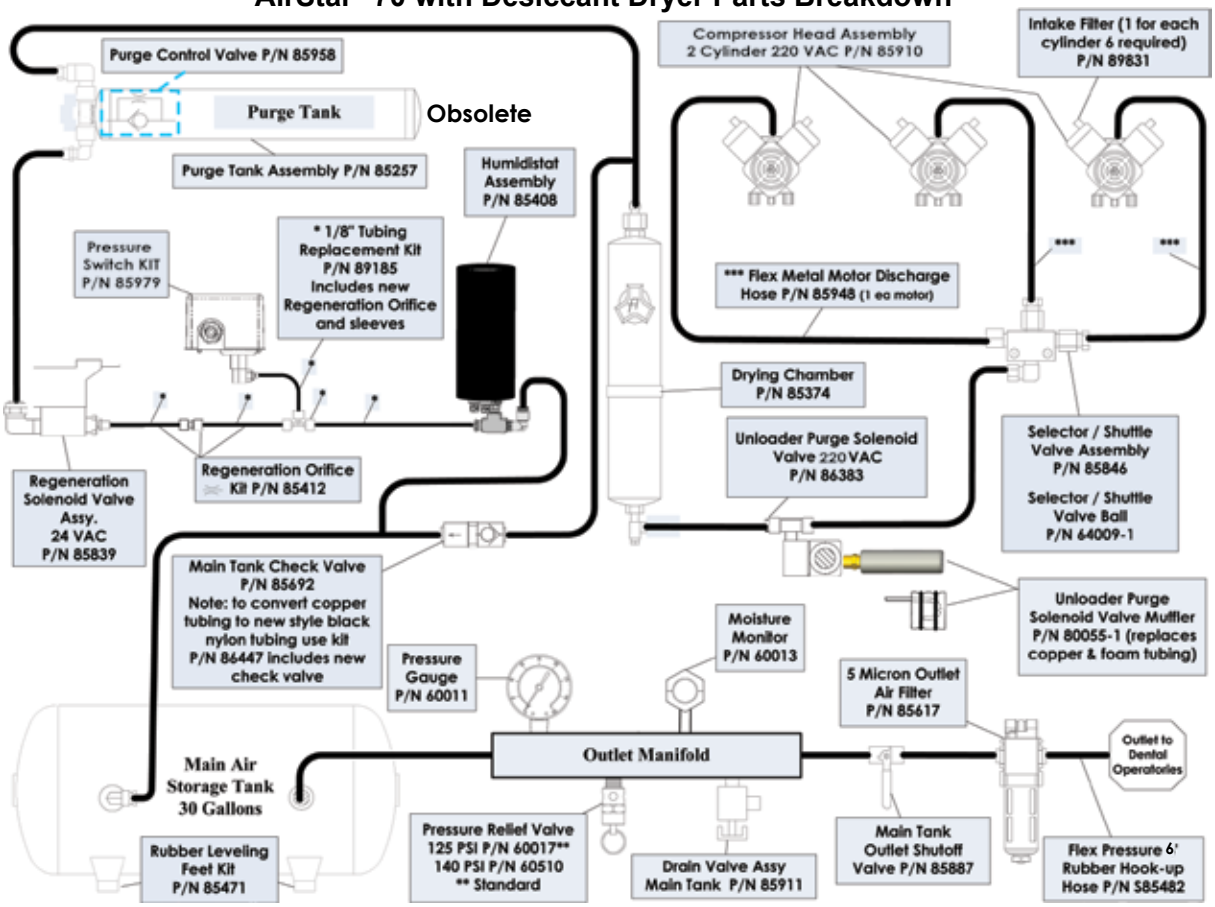

AirStar 70 with Desiccant Dryer Electrical Breakdown

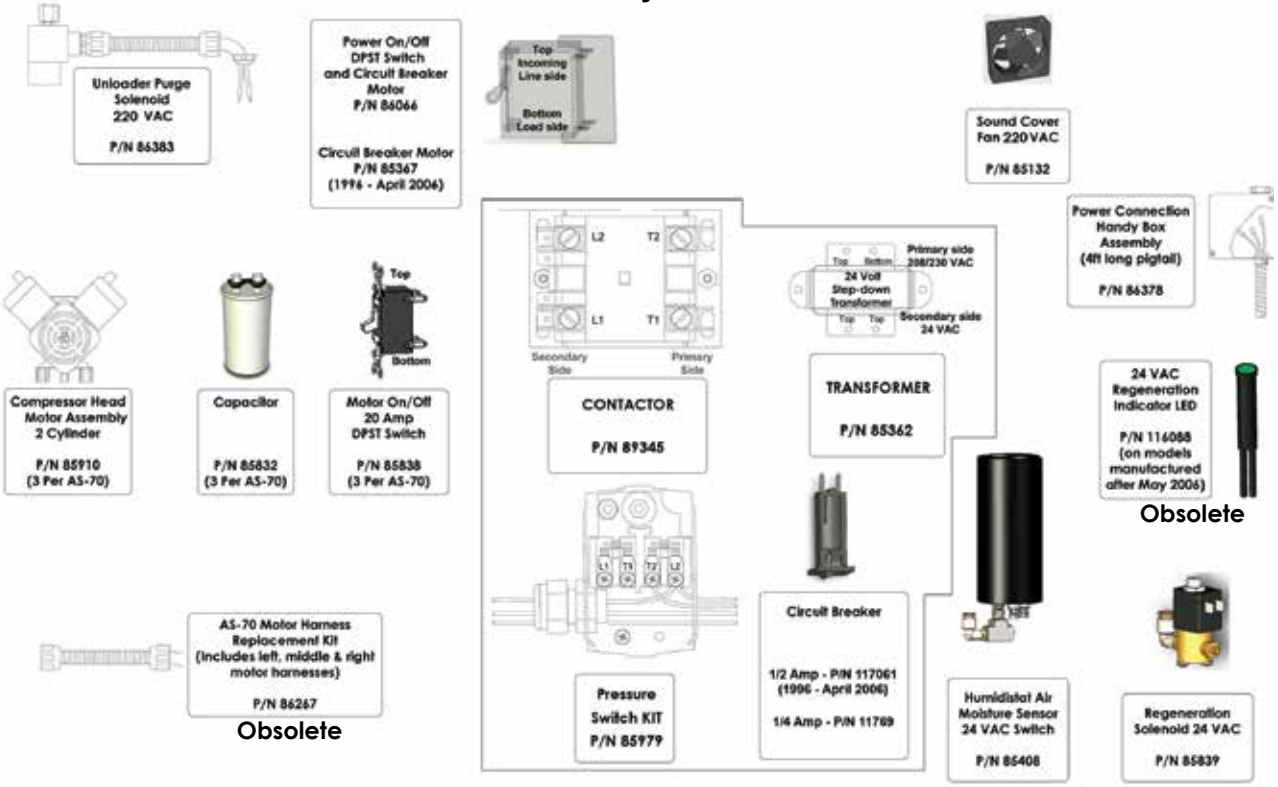

Part Number	Description		Price
AirStar® AS70/AS70C Parts Breakdown			
85887	Ball Valve; 1/2" NPT	$	32.45
85948	Braided Hose; Flare x 1/4" MNPT, 31-1/2" Overall Length	$	273.62
85692	Check Valve; 3/8" NPT, Brass	$	88.68
86447	Check Valve Kit	$	308.23
85911	Drain Valve Assembly	$	42.18
85374	Drying Chamber Assembly; 3 1/2 X 24	$	651.45
85617	Filter Kit; 5 Micron, 1/2" NPT	$	329.00
S85482	Hook-Up Hose Kit; 6' Length, 3/8" MNPT	$	50.83
85408	Humidistat Assembly	$	697.69
89831	Air Intake Filter Replacement: 1 P/Cylinder for all Airstar Solutions	$	75.00
85471	Leveling Foot Kit (1 per Compressor)	$	104.91
60013	Moisture Monitor Assembly	$	32.45
85769	Outlet Manifold Assembly	$	227.12
60011	Pressure Gauge	$	15.14
85979	Pressure Switch Replacement Kit	$	138.23
85958	Purge Control Valve	$	173.04
85257	Purge Tank Assembly		Obsolete
85412	Regeneration Orifice Kit	$	60.56
85839	Regeneration Solenoid Valve Assembly	$	227.12
60017	Safety Relief Valve; 125 PSI	$	48.67
60510	Safety Relief Valve; 140 PSI	$	72.46
64009-1	Selector / Shuttle Valve Ball	$	19.95
85846	Shuttle Valve Assembly; 3 Head, AS70	$	273.62
89185	Tubing; 1/8", Replacement Kit (Includes new Regeneration Orifice and sleeves)	$	55.16
86383	Unloader Purge Solenoid Valve	$	285.49
80055-1	Unloader Purge Solenoid Valve Muffler (replaces copper & foam tubing)	$	70.30
Electrical Breakdown			
85832	Capacitor (for 85910)	$	66.95
85367	Circuit Breaker; 3 Pole, 250V, 50/	$	320.12
117061	Circuit Breaker Low Voltage, 24 VAC, 1/2 Amp	$	23.10
117690	Circuit Breaker 1/4 Amp (Low Voltage Circuit)	$	24.02
86066	Circuit Breaker; 22A	$	156.82
85910	Compressor Head Assembly; AirStar 22/40/50/70, 2 Cyl, 220 VAC	$	4,424.78
89345	Contactor 40 Amp Line Voltage with 24 VAC Coil	$	208.73
85408	Humidistat Assembly	$	697.69
86267	Motor Harness		Obsolete
86378	Power Connection Assembly; AS70	$	71.92
85979	Pressure Switch Replacement Kit	$	138.23
116088	Regeneration Indicator; 24 VAC LED (on models manufactured after May 2006)		Obsolete
85839	Regeneration Solenoid Valve Assembly	$	227.12
85132	Sound Cover Fan	$	180.61
85838	Switch; Toggle, 20A, 120 - 277	$	35.69
85362	Transformer Assembly; 230/24V	$	193.59
86383	Unloader Purge Solenoid Valve	$	285.49
Additional Items			
85494	Remote Air Intake Kit, AS70 / AS70 NEO	$	449.00
67000-1	Buck/ Boost Transformer, 7.8 kVa	$	1,779.00
80183	Vibration Pad	$	55.16

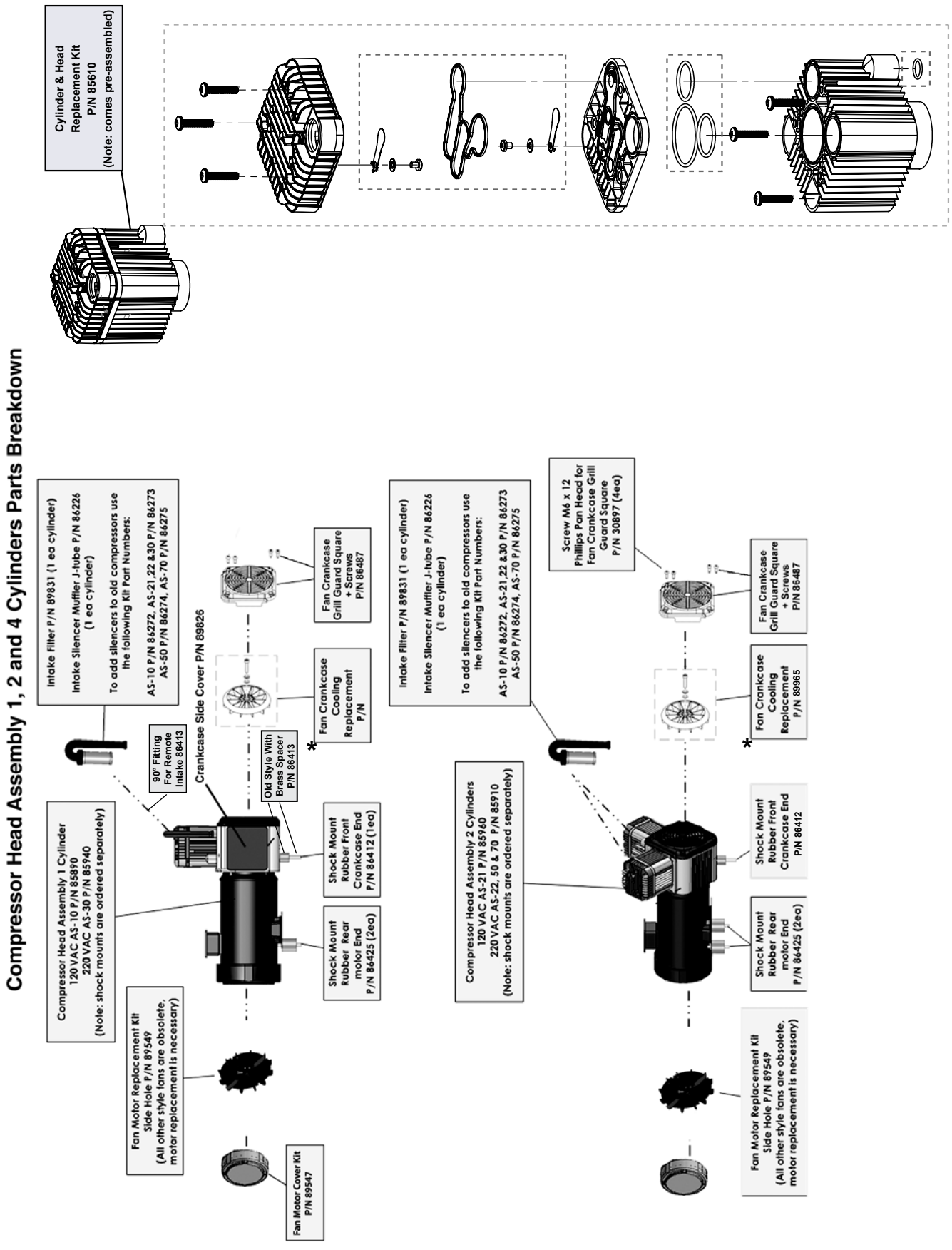
Compressor Head Assembly 1, 2 and 4 Cylinders Parts Breakdown
Cylinder & Head Replacement Kit P/N 85610 (Note: comes pre-assembled)
Intake Filter P/N 89831 (1 ea cylinder)
Intake Silencer Muffler J-tube P/N 86226 (1 ea cylinder)
To add silencers to old compressors use the following Kit Part Numbers:
AS-10 P/N 86272, AS-21,22 &30 P/N 86273
AS-50 P/N 86274, AS-70 P/N 86275
Compressor Head Assembly 1 Cylinder 120 VAC AS-10 P/N 85890 220 VAC AS-30 P/N 85940 (Note: shock mounts are ordered separately)
90° Fitting For Remote Intake 86413
Crankcase Side Cover P/N 89826
Old Style With Brass Spacer P/N 86413
Fan Crankcase Cooling Replacement P/N
Fan Crankcase Grill Guard Square + Screws P/N 86487
Shock Mount Rubber Front Crankcase End P/N 86412 (1ea)
Shock Mount Rubber Rear motor End P/N 86425 (2ea)
Fan Motor Replacement Kit Side Hole P/N 89549 (All other style fans are obsolete, motor replacement is necessary)
Fan Motor Cover Kit P/N 89549
Intake Filter P/N 89831 (1 ea cylinder)
Intake Silencer Muffler J-tube P/N 86226 (1 ea cylinder)
To add silencers to old compressors use the following Kit Part Numbers:
AS-10 P/N 86272, AS-21,22 &30 P/N 86273
AS-50 P/N 86274, AS-70 P/N 86275
Screw M6 x 12 Phillips Pan Head for Fan Crankcase Grill Guard Square P/N 30897 (4ea)
Compressor Head Assembly 2 Cylinders 120 VAC AS-21 P/N 85960 220 VAC AS-22, 50 & 70 P/N 85910 (Note: shock mounts are ordered separately)
Fan Crankcase Cooling Replacement P/N 89965
Fan Crankcase Grill Guard Square + Screws P/N 86487
Shock Mount Rubber Front Crankcase End P/N 86412
Shock Mount Rubber Rear motor End P/N 86425 (2ea)
Fan Motor Replacement Kit Side Hole P/N 89549 (All other style fans are obsolete, motor replacement is necessary)

Part Number	Description	Price
Replacement Compressor Heads 1, 2 and 4 Cylinders		
87695	Compressor Head Assembly for AirStar 10 NEO	$ 3,435.00
87696	Compressor Head Assembly; AirStar 30/40 NEO, 1 Cyl, 220 VAC	$ 3,435.00
87697	Compressor Head Assembly; AirStar 21 NEO, 2 Cyl, 120 VAC	$ 4,425.00
87698	Compressor Head Assembly for AirStar 22/40/50/70 NEO	$ 4,425.00
85890	Compressor Head Assembly; AirStar 10, 1 Cyl, 120 VAC	$ 3,435.73
85940	Compressor Head Assembly; AirStar 12/30/40, 1 Cyl, 220 VAC	$ 3,435.73
85960	Compressor Head Assembly; AirStar 21, 2 Cyl, 120 VAC	$ 4,424.78
85910	Compressor Head Assembly; AirStar 22/40/50/70, 2 Cyl, 220 VAC	$ 4,424.78
85880	Compressor Head Assembly; AirStar 100, 4 Cyl, 220 VAC-30	$ 7,825.00
Compressor Head Assembly 1, 2 and 4 Cylinders		
89802	Compressor Fan Replacement Kit	$ 61.65
86487	Crankcase Cover Replacement Kit	$ 35.70
89841	Crankcase Cover (Iron Eccentric Only)	$ 54.08
89826	Crankcase Side Cover	$ 00.00
85610	Cylinder & Head Replacement Kit	$ 377.92
89831	Air Intake Filter Replacement: 1 P/Cylinder for all Airstar Solutions	$ 75.00
86226	Intake Air Sound Damper	$ 199.00
89549	Motor Fan	$ 32.45
89547	Motor Fan Cover	$ 73.54
86502	Motor Mount Kit	$ 30.00
86413	Remote Air Intake Elbow	$ 5.41
54509	Tubing, Polyurethane 10mm Blue, Per Foot	$ 7.57
Contactors		
53180	Circuit Breaker; 3A	
53080	Contactor; 120 VAC, Under 1-1/2 HP	
55407	Contactor 230 VAC, 24 VAC Coil STS-3 & STS-5	
53081	Contactor; 220 VAC, Under 2-1/2 HP	
53082	Contactor; 220 VAC, Under 5 HP	
89345	Contactor 40 Amp Line Voltage with 24 VAC Coil	
53183	Contactor; 40A (New Style - Blue Box)	
53082M	Contactor; 40A, (For Tandem Assembly)	
54498	Contactor 3 Pole, 40amp, 24 Volt Coil	
90219	Fuse Holder Old Style - Brown Box	
40719	Fuse; 2A, 5 Pack	
53087	Transformer; 120 VAC (Old Style, Brown Box)	
53182	Transformer; 120/220 VAC (New Style, Blue Box)	
53088	Transformer; 220 VAC (Old Style, Brown Box)	

Note: Compressor Head Assembly 1 and 2 Cylinders are relevant to both Membrane and Desiccant Models of AirStar.

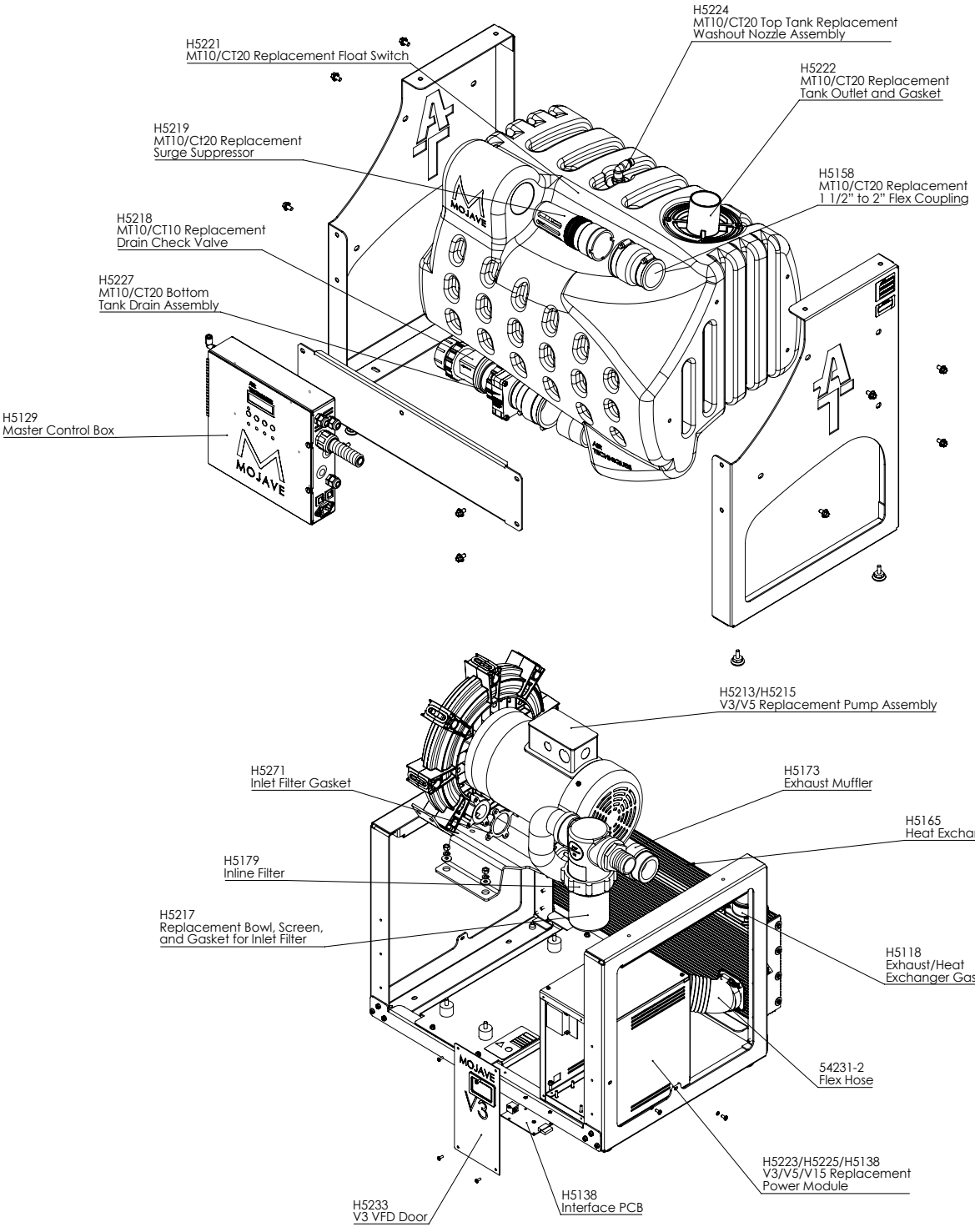

H5220
110V solenoid Valve Replacement
(optional for the higher powered models only)

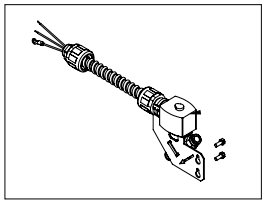

Part Number	Description	Price
Mojave® Accessories		
MMC	Mojave Master Controller	$ 2,566.20
MT10	10–gal. Separation Tank for Mojave V3, V5, 2V3 and 2V5	$ 3,195.00
CT20	Dual Continuum Tank for Mojave 3V5, 4V5, 2V3CT and 2V5CT	$ 5,100.90
H5231	Mojave Powered Automatic Drain Pump	$ 1,155.00
H5173	Exhaust Muffler	$ 200.08
H5179	Inline Filter	$ 65.00
Replacement Parts		
H5159	2" Flexible Coupling Connector	$ 12.50
419342	Cable, CAT-5, 10 ft.	$ 10.92
89324	Clamp; Hose, 1-9/16" to 2 1/2" Max	$ 5.41
57169	Clamp; Hose, 1.31 - 2.25 dia. (each)	$ 7.57
56194	Connector Adapter, 1/2 MNPT X 3/8 Push	$ 10.82
57253S	Connector Adapter, 1-1/2" MNPT X 1-1/2" BARB	$ 21.63
H5226	CT20 Bottom Tank Replacement Washout Nozzle Assembly	$ 80.26
H5228	CT20 Replacement Clear Check Valve	$ 79.49
H5207	Drip Leg Assembly	$ 85.00
H5271	Gasket, Inlet Filter	$ 13.52
H5165	Heat Exchanger	$ 513.71
54521	Hose; 1 1/2" ID, White Spiral: Hi-Tech - Blue	$ 25.96
56057	Hose Assembly, Exhaust for Separator, 2 1/4" x 17", 1" Wide Cuff	$ 54.08
77243	Line cord; 10ft, 18 ga., IEC x Hospital Grade 250V	$ 44.10
MMC-R	Mojave Master Controller Replacement, V3, V5 and V7 pumps.	$ 868.14
53202-1	Switch Assembly., Control Panel, Mojave, Cleanshield, Vacuum Equalizer P.B. Switch - 6 VDC LED	$ 72.46
H5227	MT10/CT20 Bottom Tank Drain Assembly	$ 124.91
H5218	MT10/CT20 Tank Drain Check Valve	$ 73.54
H5222	M10/CT20 Tank Outlet and Gasket	$ 68.80
H5219	MT10/CT20 Tank Surge Suppressor	$ 71.40
H5224	MT10/CT20 Top Tank, Washout Nozzle Assembly	$ 129.78
H5220	MT10/CT20 Washout Solenoid Assembly	$ 268.21
H5170	Pump Accessory Kit	$ 82.50
H5217	Safety Inline Filter (use 1 per pump for all Mojave V3, V5 and V7's)	$ 59.00
H5216	V3/V5 Replacement Inlet Filter	$ 272.54
H5221	Tank Float Switch Assembly	$ 73.54
H5206	Tank Outlet Assembly; Single Pump	$ 240.00
19271	Polyethelene Tubing, 3/8 Inch/ per ft.	$ 5.46
51453	Tubing, Polyurethene, 1/4" OD/Per Foot	$ 3.33
H5223	V3 Replacement Power Module	$ 1,036.08
H5213	V3 Replacement Pump Assembly	$ 7,895.00
H5269	V3/V5 Replacement VFD Interface PCB Kit	$ 136.50
H5225	V5 Replacement Power Module	$ 1,345.39
H5215	V5 Replacement Pump Assembly	$ 9,995.00
H5635	V7 Replacement Power Module	$ 635.00
H5617	V7 Replacement Pump Assembly	$ 12,695.00
H5622	V7 Replacement VFD Interface PCB Kit	$ 135.00
H5480	V15 Replacement Power Module	$ 4,704.53
H5491	V15 Replacement Pump Assembly	$ 20,695.00
H5458	V15 Replacement VFD Interface PCB Kit	$ 130.00
H5158	1 1/2" to 2" Flex Coupling	$ 7.50
86064	V3/V5 Power Module Circuit Breaker	$ 156.82

VacStar® NEO VS20NEO & VS40NEO Wet Vacuum

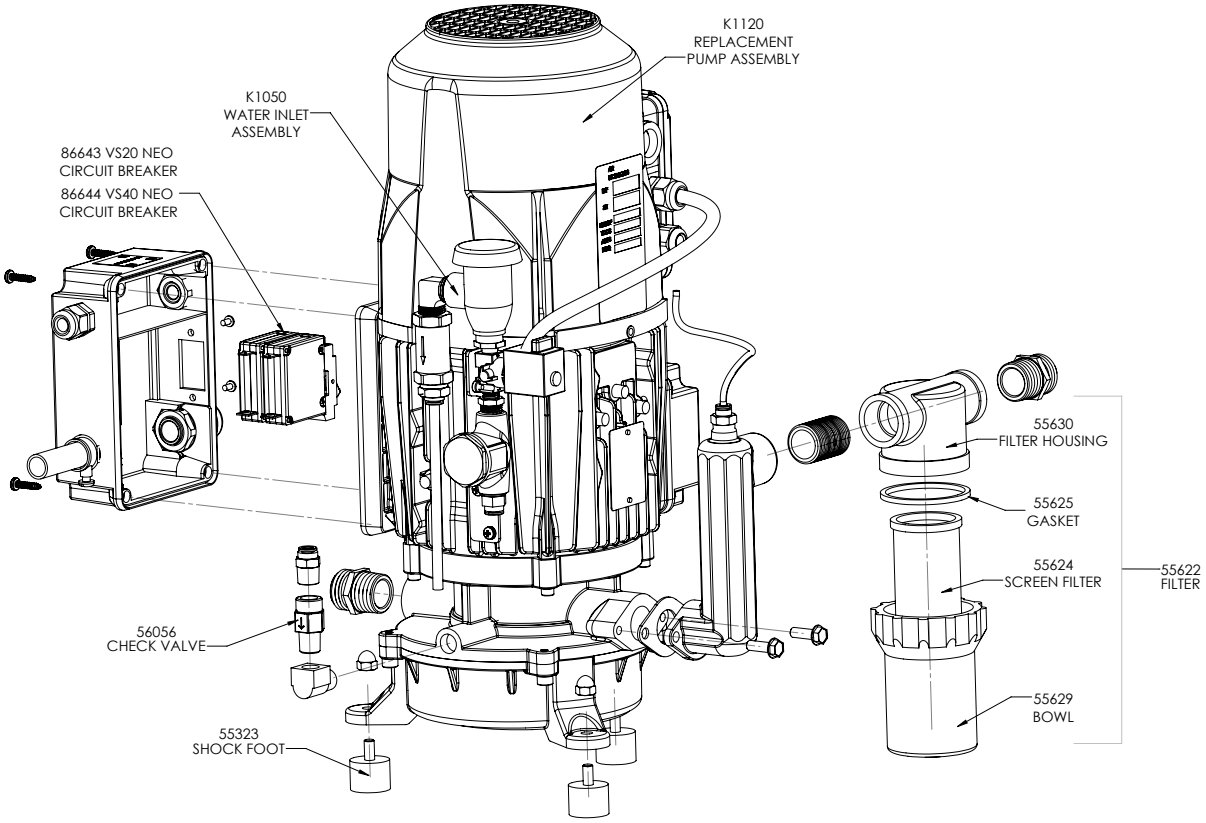

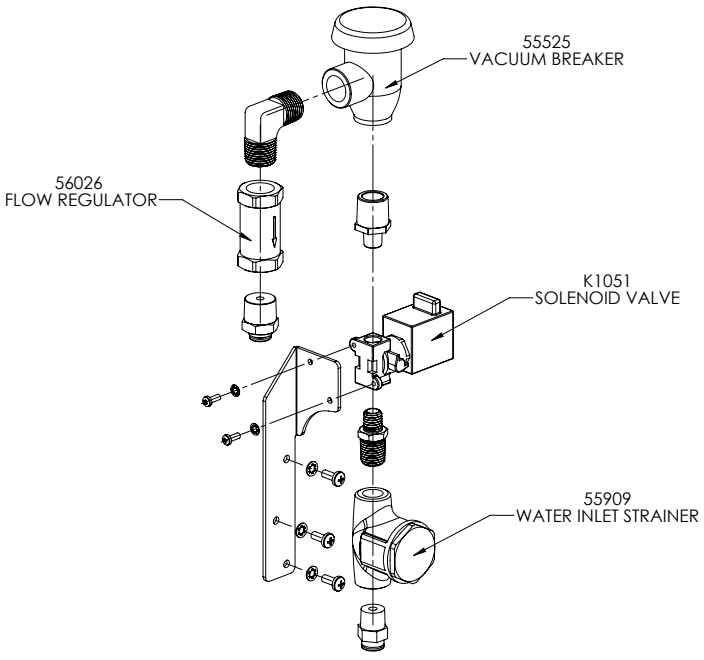

Part Number	Description		Price
VacStar® NEO VS20NEO & VS40NEO Wet Vacuum (in chart)			
56056	Check Valve,Water Inlet Manifold	$	30.59
56026	Flow Regulator; 0.13 Gallons Per Minute, Nickel-Plated	$	71.07
86643	Power On/Off Switch and Circuit Breaker 10 AMP, AS NEO 22/30 VS20NEO	$	91.67
86644	Power On/Off Switch and Circuit Breaker 15 AMP, AS NEO 10/40 VS40NEO	$	91.67
55863	Motor Vibration Shock Mount (Single Units)	$	40.02
K1051	Solenoid Valve; VacStar NEO	$	118.45
55862	Solids Collector Complete Kit, 3/4", (Single Units)	$	67.70
55880	Solids Collector Replacement Cartridge, 3/4", Single	$	77.79
55880C	Solids Collector Replacement Kit for VacStar 20/40 (12 pack)	$	295.00
55517	Vacuum Breaker Seal Kit	$	50.83
55525	Vacuum Breaker; Atmospheric	$	77.04
K1120	VS20NEO Replacement Pump Assembly	$	4,279.00
K1140	VS40NEO Replacement Pump Assembly	$	4,579.00
K1050	Water Inlet Assembly; VacStar NEO Single Unit	$	466.96
55909	Water Inlet Strainer	$	98.42
K1095	Muffler, VS20 NEO & VS40 NEO	$	80.00

VacStar® NEO VS50NEO & VS80NEO Wet Vacuum

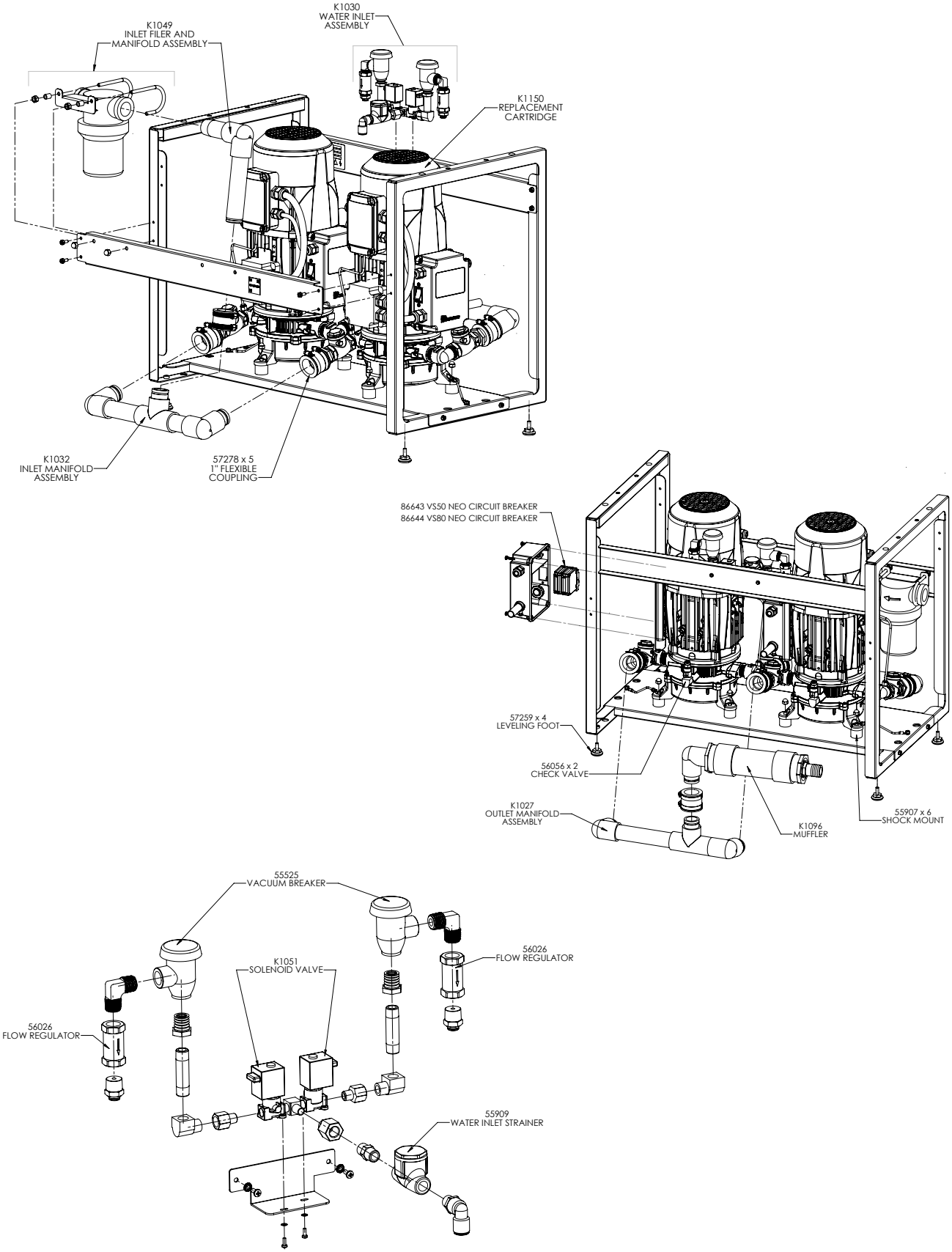

Part Number	Description	Price
VacStar® NEO VS50NEO & VS80NEO Wet Vacuum (in chart)		
56056	Check Valve,Water Inlet Manifold	$ 30.59
56026	Flow Regulator; 0.13 Gallons Per Minute, Nickel Plated	$ 71.07
K1049	Inlet Filter And Manifold Assembly	$ 50.96
K1032	Inlet Manifold Assembly	$ 61.36
57259	Leveling Foot (Twin Units)	$ 5.41
86643	Power On/Off Switch and Circuit Breaker 10 AMP, AS NEO 22/30 VS20NEO	$ 91.67
86644	Power On/Off Switch and Circuit Breaker 15 AMP, AS NEO 10/40 VS40NEO	$ 91.67
K1027	Outlet Manifold Assembly	$ 92.56
57278	PCONN; Coupling,1" Flexible	$ 21.63
55859	Motor Vibration Shock Mount (Twin Units)	$ 14.06
K1051	Solenoid Valve; VacStar NEO	$ 118.45
55079	Solids Collector Complete Kit, 1", with Remote Option (Twin Units)	$ 193.28
55094	Solids Collector Replacement Cartridge, 1", Single	$ 109.00
55094C	Solids Collector Replacement Kit for VacStar 50/80 (8 pack)	$ 295.00
55517	Vacuum Breaker Seal Kit	$ 50.83
55525	Vacuum Breaker; Atmospheric	$ 77.04
K1150	VS50NEO Replacement Cartridge	$3,809.97
K1180	VS80NEO Replacement Cartridge	$4,118.97
K1030	Water Inlet Assembly; VacStar NEO Twin Unit	$ 830.96
55909	Water Inlet Strainer	$ 98.42
K1096	Muffler, VS50 NEO & VS80 NEO	$ 130.00

VacStar® 20
BREAKDOWN

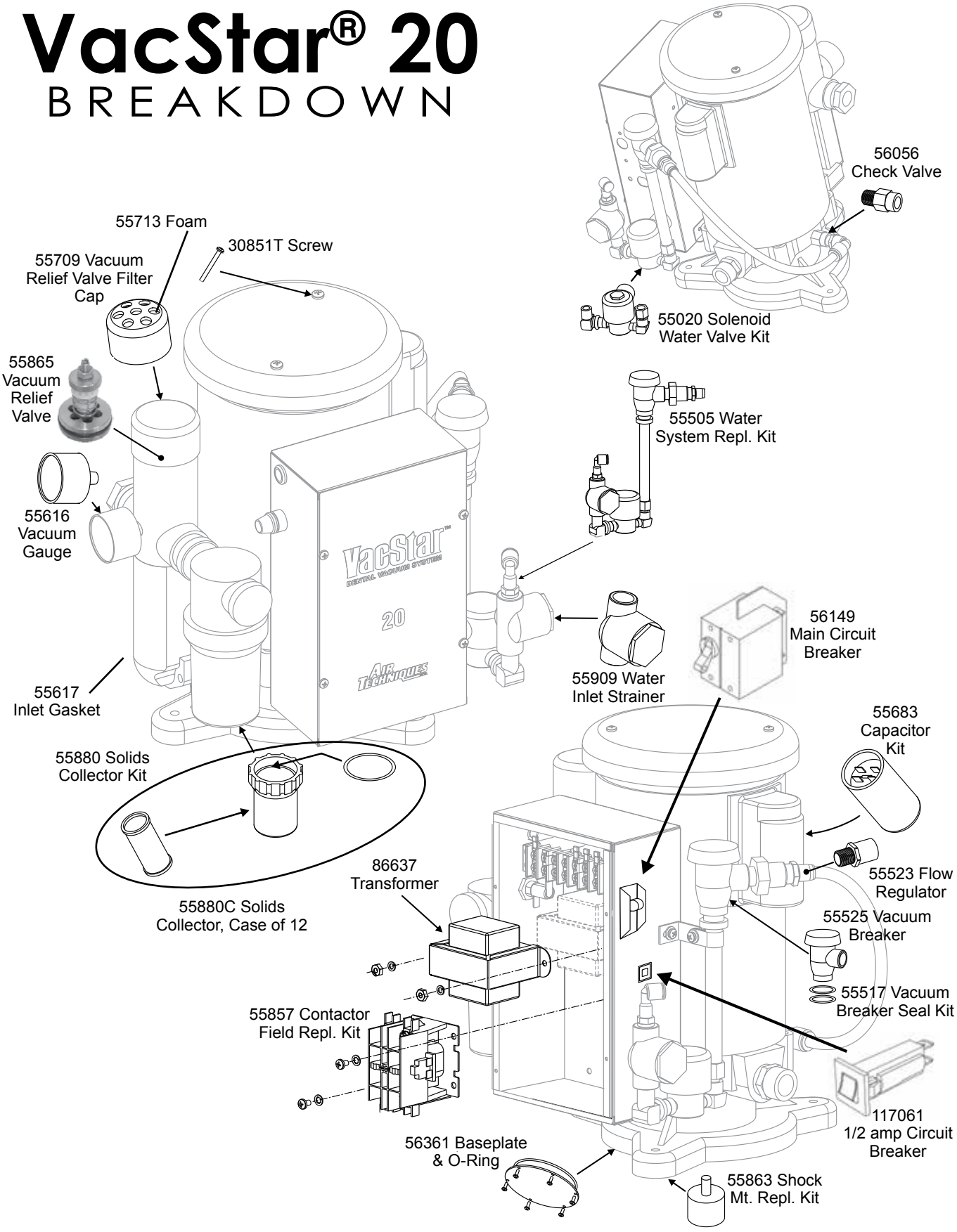

Part Number	Description	Price
VacStar® VS20 Wet Vacuum (in chart)		
56361	Base Plate & O-Ring	$ 85.44
55683	Capacitor Kit	$ 82.19
56056	Check Valve, Water Inlet Manifold	$ 30.59
56149	Circuit Breaker, 16A	$ 116.80
117061	Circuit Breaker Low Voltage, 24 VAC, 1/2 Amp	$ 23.10
55857	Contactor Field Replacement Kit	$ 128.70
55333	Drip Cover w/ Spacer Kit	$ 104.91
55863	Motor Vibration Shock Mount (Single Units)	$ 40.02
55020	Solenoid Water Valve Kit, VS20	$ 227.12
55880	Solids Collector Replacement Cartridge, 3/4", Single	$ 77.79
86637	Transformer, 208/230 VAC Step-down to 24 VAC	$ 73.54
55525	Vacuum Breaker; Atmospheric	$ 77.04
55517	Vacuum Breaker Seal Kit	$ 50.83
55616	Vacuum Gauge, 30" Hg 1/8" FNPT	$ 26.78
55865	Vacuum Relief Valve	$ 208.73
55709	Vacuum Relief Valve Filter Cap	$ 70.30
55713	Vacuum Relief Valve Filter, Foam, Die Cut	$ 7.57
55909	Water Inlet Strainer	$ 98.42
55505	Water System Replacement Kit, VacStar 2 & VacStar 20	$ 527.77
Additional Parts (not in chart)		
55321	Base Plate O-Ring	$ 5.41
56105	Check Valve & Nipples Kit	$ 53.25
55292	Hose Assembly, Exhaust Manifold	$ 63.81
55269	Hose, Barb Fitting, 1" Barb X 3/4" Fgh	$ 30.28
55941	Hose, PVC 3/4" I.D. Per Feet, Reinforced, Suction/Discharge	$ 7.57
55626	Manifold Plug	$ 5.35
55877	Nylon Base, 1HP Pump Housing Replacement	$ 90.90
55802	Pconn; Adapter, 1/4 MNPT X 3/8 Poly	$ 10.82
19270	Polyethelene Tubing, 1/4 Inch per ft.	$ 4.37
19271	Polyethelene Tubing, 3/8 Inch/ per ft.	$ 5.46
55110	Pump, 1 HP, Replacement, (See Exchange Parts)	$ 2,552.72
55519	Solenoid Valve Water (Square), 115 V	$ 184.94
55862	Solids Collector Complete Kit, 3/4", (Single Units)	$ 67.70
55880C	Solids Collector Replacement Kit for VacStar 20/40 (12 pack)	$ 295.00
55861	Terminal Strip, Sub Assembly Replacement	$ 32.76
Additional Items		
H-2	HydroMiser for VacStar 20 (recycles up to 75% of water)	$ 1,325.00
55078	Wall Mount 3/4" Inline Filter Kit	$ 135.41
55801	Installation Kit, VacStar Single	$ 320.12
55810	Muffler	$ 270.38
55881	Vacstar 20/40 Maintenance Kit. Includes # 55880 & #55709	$ 129.00
55007	Vacstar Conversion Kit, Two Singles to a Dual	$ 935.00

VacStar® 40
BREAKDOWN

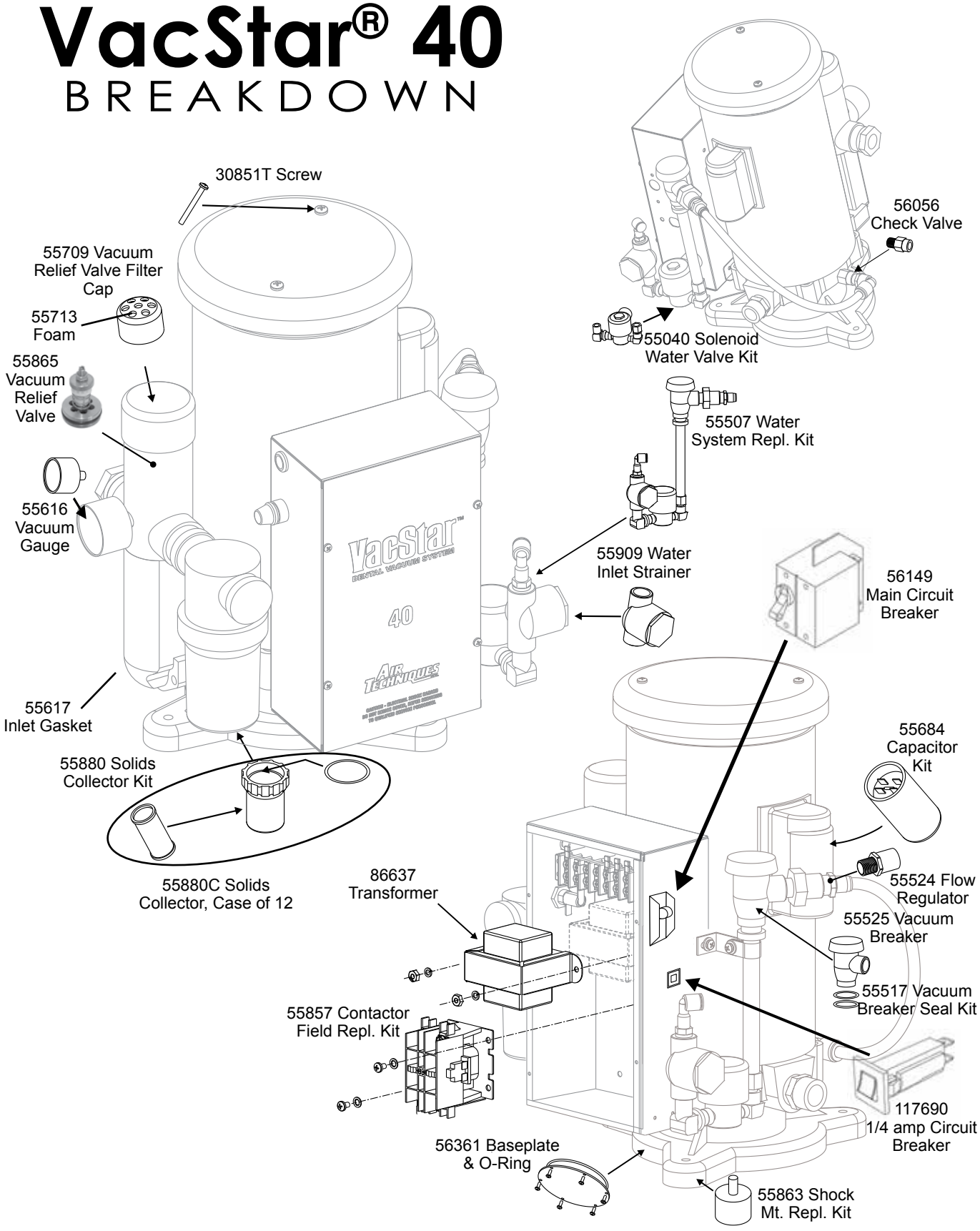

Part Number	Description	Price
VacStar® VS40 Wet Vacuum (in chart)		
56361	Base Plate & O-Ring	$ 85.44
55684	Capacitor Kit	$ 88.68
56056	Check Valve,Water Inlet Manifold	$ 30.59
117690	Circuit Breaker 1/4 Amp (Low Voltage Circuit)	$ 24.02
56149	Circuit Breaker, Main	$ 116.80
55857	Contactor Field Replacement Kit	$ 128.70
55333	Drip Cover w/Spacer Kit	$ 104.91
55524	Flow Regulator	$ 103.82
55863	Motor Vibration Shock Mount (Single Units)	$ 40.02
55040	Solenoid Water Valve Kit	$ 155.74
55880	Solids Collector Replacement Cartridge, 3/4", Single	$ 77.79
86637	Transformer, 208/230 VAC Step-down to 24 VAC	$ 73.54
55525	Vacuum Breaker; Atmospheric	$ 77.04
55517	Vacuum Breaker Seal Kit	$ 50.83
55616	Vacuum Gauge, 30" Hg 1/8" FNPT	$ 26.78
55865	Vacuum Relief Valve	$ 208.73
55709	Vacuum Relief Valve Filter Cap	$ 70.30
55713	Vacuum Relief Valve Filter, Foam, Die Cut	$ 7.57
55909	Water Inlet Strainer	$ 98.42
55507	Water System Replacement Kit, VacStar 4 & VacStar 40	$ 553.38
Additional Items (not in chart)		
55321	Base Plate O-Ring	$ 5.41
56105	Check Valve & Nipples Kit	$ 53.25
55292	Hose Assembly, Exhaust Manifold	$ 63.81
55269	Hose, Barb Fitting, 1" Barb X 3/4" Fgh	$ 30.28
55941	Hose, PVC 3/4" I.D. Per Foot, Reinforced, Suction/Discharge	$ 7.57
55626	Manifold Plug	$ 5.35
55878	Nylon Base, 2HP Pump Housing Replacement	$ 131.94
55802	Pconn; Adapter, 1/4 MNPT X 3/8 Poly	$ 10.82
19270	Polyethelene Tubing, 1/4 Inch per ft.	$ 4.37
19271	Polyethelene Tubing, 3/8 Inch/ per ft.	$ 5.46
55111	Pump, 2 HP, Replacement, (See Exchange Parts)	$ 3,192.25
55518	Solenoid Valve Water (Square), 220 V	$ 183.86
55862	Solids Collector Complete Kit, 3/4", (Single Units)	$ 67.70
55880C	Solids Collector Replacement Kit for VacStar 20/40 (12 pack)	$ 295.00
Additional Items		
H-4	Hydromiser Kit	$ 1,325.00
55078	Wall Mount 3/4" Inline Filter Kit	$ 135.41
55801	Installation Kit, VacStar Single	$ 320.12
55810	Muffler	$ 270.38
55881	Vacstar 20/40 Maintenance Kit. Includes # 55880 & #55709	$ 129.00
55007	Vacstar Conversion Kit, Two Singles to a Dual	$ 935.00

VacStar®50
BREAKDOWN

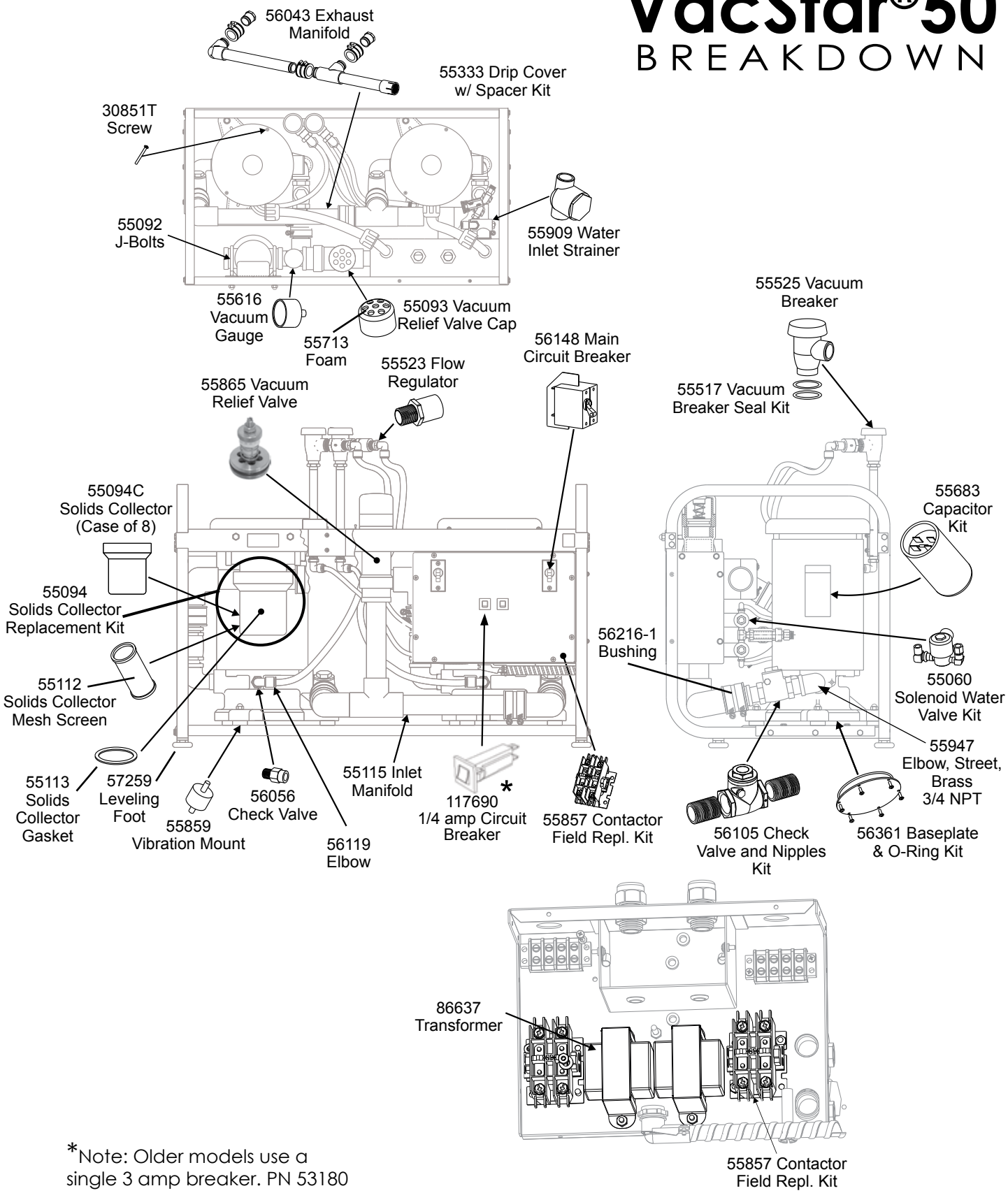

*Note: Older models use a single 3 amp breaker. PN 53180

Part Number	Description	Price
VacStar® VS50/50H Wet Vacuum (in chart)		
56361	Base Plate & O-Ring Kit	$ 85.44
56216-1	Bushing	$ 21.63
55683	Capacitor Kit	$ 82.19
56056	Check Valve,Water Inlet Manifold	$ 30.59
56105	Check Valve & Nipples Kit	$ 53.25
117690	Circuit Breaker 1/4 Amp (Low Voltage Circuit)	$ 24.02
56148	Circuit Breaker, Main	$ 116.80
55857	Contactor Field Replacement Kit	$ 128.70
55333	Drip Cover w/Spacer Kit	$ 104.91
56119	Elbow Fitting, 3/8" Push x 1/4" MNPT	$ 11.90
56043	Exhaust Manifold (VacStar 50 only)	$ 273.62
55523	Flow Regulator (VacStar 50 only)	$ 103.82
55115	Inlet Manifold	$ 562.38
55092	J-Bolts	$ 7.57
57260	Leveling Feet VS50 & VS80 (pkg/4) includes 4 of #57259	$ 5.50
55060	Solenoid Water Valve Kit, Both Solenoids & Filter	$ 397.03
55094	Solids Collector Replacement Cartridge, 1", Single	$ 109.00
55094C	Solids Collector Replacement Kit for VacStar 50/80 (8 pack)	$ 295.00
55203	Solids Collector w/Black Housing	$ 88.68
86637	Transformer, 208/230 VAC Step-down to 24 VAC	$ 73.54
55525	Vacuum Breaker; Atmospheric	$ 77.04
55517	Vacuum Breaker Seal Kit	$ 50.83
55616	Vacuum Gauge, 30" Hg 1/8" FNPT	$ 26.78
55865	Vacuum Relief Valve	$ 208.73
55713	Vacuum Relief Valve Filter, Foam, Die Cut	$ 7.57
55859	Motor Vibration Shock Mount (Twin Units)	$ 14.06
55909	Water Inlet Strainer	$ 98.42
Additional Parts (not in chart)		
56178	1 HP replacement for VS50 or VS50H	$ 2,808.10
55321	Base Plate O-Ring	$ 5.41
53180	Circuit Breaker; 3A	$ 35.69
55142	Discharge Hose Assembly	$ 104.91
55117	Eductor Assembly, VS50	$ 517.28
56044	Exhaust Manifold (VacStar 50H only)	$ 273.62
55292	Hose Assembly, Exhaust Manifold	$ 63.81
56057	Hose Assembly, Exhaust for Separator, 2 1/4" x 17", 1" Wide Cuff	$ 54.08
55269	Hose, Barb Fitting, 1" Barb X 3/4" Fgh	$ 30.28
55948	Hose, PVC 1" I.D. Reinforced, per ft.	$ 10.82
55877	Nylon Base, 1HP Pump Housing Replacement	$ 90.90
57278	PCONN; Coupling,1" Flexible	$ 21.63
55802	PCONN; Adapter, 1/4" MNPT X 3/8" Poly	$ 10.82
55223	Polyethelene Tubing, 1/2 Inch/ per ft	$ 5.41
19270	Polyethelene Tubing, 1/4 Inch per ft.	$ 4.37
19271	Polyethelene Tubing, 3/8 Inch/ per ft.	$ 5.46
55127	Separator Assembly, Hydromiser	$ 296.33
55079	Solids Collector Complete Kit, 1", with Remote Option (Twin Units)	$ 193.28
85838	Switch; Toggle, 20A, 120 - 277	$ 35.69
117403	Terminal Block	$ 10.50
53182	Transformer; 120/220 VAC (New Style, Blue Box)	$ 158.98
55093	Vacuum Relief Valve Filter	$ 82.19
56010	Water Flow Regulator (1.0 GPM) (VacStar 50H only)	$ 86.52
55805	Water System Replacement Kit (VS50)	$ 400.16
55096	Water System Replacement Kit (VS50H)	$ 277.95
Additional Items		
55149	Installation Kit, VacStar Twin	$ 301.74
55087	HydroMiser Wall–Mount Kit	$ 185.00
56041	HydroMiser for VacStar 50 (recycles up to 75% of water)	$ 1,085.00
55097	Vacstar 50/80 Maintenance Kit. Includes # 55094 & #55093	$ 169.00

VacStar® 80H
BREAKDOWN

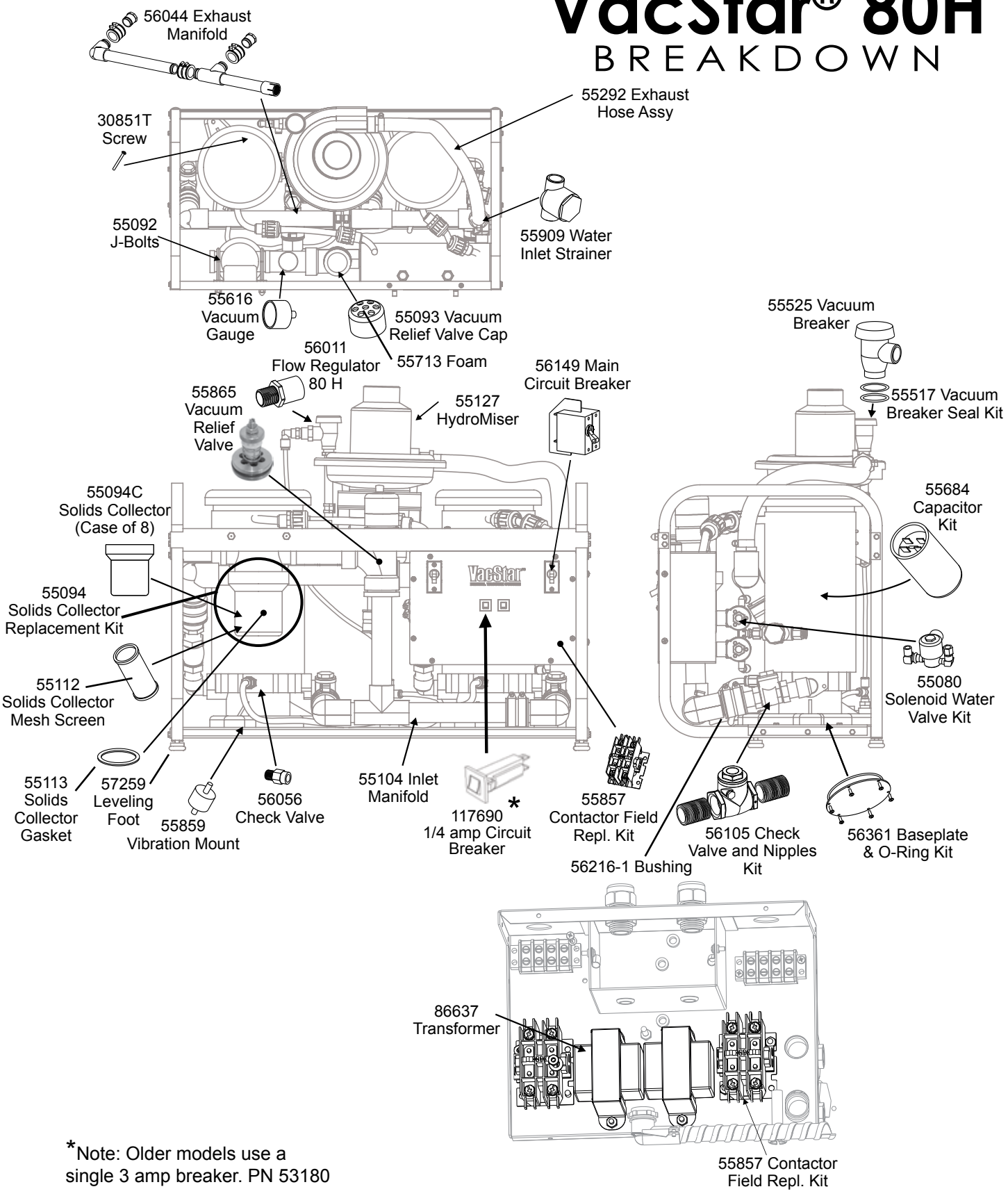

*Note: Older models use a single 3 amp breaker. PN 53180

Part Number	Description	Price
VacStar® VS80/80H Wet Vacuum (in chart)		
56361	Base Plate & O-Ring Kit	$ 85.44
56216-1	Bushing	$ 21.63
55684	Capacitor Kit	$ 88.68
56056	Check Valve,Water Inlet Manifold	$ 30.59
56105	Check Valve & Nipples Kit	$ 53.25
117690	Circuit Breaker 1/4 Amp (Low Voltage Circuit)	$ 24.02
56149	Circuit Breaker, Main	$ 116.80
55857	Contactor Field Replacement Kit	$ 128.70
55333	Drip Cover w/ Spacer Kit	$ 104.91
55292	Hose Assembly, Exhaust Manifold	$ 63.81
56044	Exhaust Manifold (VacStar 80H only)	$ 273.62
55104	Inlet Manifold	$ 579.68
55092	J-Bolts	$ 7.57
55127	Separator Assembly, Hydromiser	$ 296.33
55080	Solenoid Water Valve Kit, VS80-80H	$ 388.75
55094C	Solids Collector Replacement Kit for VacStar 50/80 (8 pack)	$ 295.00
55094	Solids Collector Replacement Cartridge, 1", Single	$ 109.00
55203	Solids Collector w/Black Housing	$ 88.68
86637	Transformer, 208/230 VAC Step-down to 24 VAC	$ 73.54
55525	Vacuum Breaker; Atmospheric	$ 77.04
55517	Vacuum Breaker Seal Kit	$ 50.83
55616	Vacuum Gauge, 30" Hg 1/8" FNPT	$ 26.78
55865	Vacuum Relief Valve	$ 208.73
55093	Vacuum Relief Valve Filter	$ 82.19
55713	Vacuum Relief Valve Filter, Foam, Die Cut	$ 7.57
55859	Motor Vibration Shock Mount (Twin Units)	$ 14.06
55524	Water Flow Regulator, (.75 GMP) (VacStar 80)	$ 103.82
55909	Water Inlet Strainer	$ 98.42
Additional Parts (not in chart)		
55321	Base Plate O-Ring	$ 5.41
53180	Circuit Breaker; 3A	$ 35.69
55142	Discharge Hose Assembly	$ 104.91
55089	Eductor Assembly, VS80H	$ 509.39
55767	Eductor Valve Check-Duck Bill only	$ 8.65
56043	Exhaust Manifold (VacStar 80 only)	$ 273.62
56057	Hose Assembly, Exhaust for Separator, 2 1/4" x 17", 1" Wide Cuff	$ 54.08
55269	Hose, Barb Fitting, 1" Barb X 3/4" Fgh	$ 30.28
55948	Hose, PVC 1" I.D. Reinforced, per ft.	$ 10.82
57260	Leveling Feet VS50 & VS80 (pkg/4) includes 4 of #57259	$ 5.50
55878	Nylon Base, 2HP Pump Housing Replacement	$ 131.94
57278	PCONN; Coupling,1" Flexible	$ 21.63
55802	PCONN; Adapter, 1/4" MNPT X 3/8" Poly	$ 10.82
55223	Polyethelene Tubing, 1/2 Inch/ per ft.	$ 5.41
19270	Polyethelene Tubing, 1/4 Inch per ft.	$ 4.37
19271	Polyethelene Tubing, 3/8 Inch/ per ft.	$ 5.46
56179	Replacement Pump Assy 2 HP (See Exchange Parts)	$ 2,937.95
55079	Solids Collector Complete Kit, 1", with Remote Option (Twin Units)	$ 193.28
85838	Switch; Toggle, 20A, 120 - 277	$ 35.69
53182	Transformer; 120/220 VAC (New Style, Blue Box)	$ 158.98
56011	Water Flow Regulator (1.5 GPM) (VacStar 80H)	$ 86.52
55524	Water Flow Regulator, (.75 GMP) (VacStar 80)	$ 103.82
55806	Water System Replacement Kit (VS80)	$ 422.87
55099	Water System Replacement Kit (VS80H)	$ 296.33
Additional Items		
55087	HydroMiser wall–mount kit	$ 185.00
55149	Installation Kit, VacStar Twin	$ 301.74
55097	Vacstar 50/80 Maintenance Kit. Includes # 55094 & #55093	$ 169.00

Vacuums

Part Number	Description	Price
Air/Water Separator		
55235	Manifold Assembly H-2 & H-4	$ 155.06
55270	Separator Assembly	$ 356.90
55540	Air/Water Separator	$ 785.00
56057	Hose Assembly, Exhaust for Separator, 2 1/4" x 17", 1" Wide Cuff	$ 54.08
Hydromiser		
49833	Clamp; Hose, S.S.	$ 10.50
55245	Eductor Assembly H-2 & H-5	$ 562.38
55255	Eductor Assembly H-4 & H-8	$ 499.65
55764	Handle; 3-Way Ball Valve All Models	$ 15.14
56057	Hose Assembly, Exhaust for Separator, 2 1/4" x 17", 1" Wide Cuff	$ 54.08
H-2	HydroMiser for VacStar 20 (recycles up to 75% of water)	$ 1,325.00
H-4	HydroMiser for VacStar 40 (recycles up to 75% of water)	$ 1,325.00
56041	HydroMiser for VacStar 50 (recycles up to 75% of water)	$ 1,085.00
56042	HydroMiser for VacStar 80 (recycles up to 75% of water)	$ 1,085.00
55269	Hose, Barb Fitting, 1" Barb X 3/4" Fgh	$ 30.28
55087	HydroMiser Wall–Mount Kit	$ 185.0
55235	Manifold Assembly H-2 & H-4	$ 155.06
55265	Manifold Assembly H-5 & H-8	$ 253.07
55780	Regulator Assy All Models, 60 PSI	$ 346.08
55776-2	Regulator Gauge All Models	$ 61.38
55776	Regulator;Pressure, 60PSI All Models	$ 203.32
55127	Separator Assembly, Hydromiser	$ 296.33
55225	Separator Assembly H-2, H-4, H-5, H-8	$ 361.22
55761	Valve, 3-Way Ball 1/8 FNPT All Models	$ 208.73
55767	Eductor Valve check-Duck Bill only	$ 8.65
55223	Polyethelene Tubing, 1/2 Inch/ per ft.	$ 5.41
19270	Polyethelene Tubing, 1/4 Inch per ft.	$ 4.37
19271	Polyethelene Tubing, 3/8 Inch/ per ft.	$ 5.46
Stack Racks		
56600	Utility Stack Rack Mini: (AS30,STS-5,VS50/50H & smaller - any config)	$ 1,189.00
56650	Utility Stack Rack XL: (AS 50/70,STS-6/10,VS80/80H - any config)	$ 1,429.00
56635	Utility Stack Rack Mini Drip Tray Accessory Kit	$ 400.40
56655	Utility Stack Rack XL Drip Tray Accessory Kit	$ 512.00
54145	Wall Mount Anchor Braket Kit	$ 146.00
56645	VacStar 20/NEO & 40/NEO Top Shelf Mount Kit	$ 74.36

Part Number	Description	Price
Vacuum Equalizer		
56230	Remote Switch Panel for Vacuum Equalizer	$ 369.00
53202-1	Switch Assembly., Control Panel, Mojave, Cleanshield, Vacuum Equalizer P.B. Switch - 6 VDC LED	$ 72.46
56233	Switch, Control Panel, Old Style Rocker	$ 60.56
56200	Vacuum equalizer (equilibrates run time among 2 or more pumps; (Alternates primary pump each day)	$ 1,795.00
Accessories		
53240	Two Pump Water Lockout Relay Kit	$ 125.00
55007	VacStar Conversion Kit 2 Single Pumps to Dual	$ 935.00

Part Number	Description	Price
STS-3 Dry Vacuum		
54538	Adapter Plate, Vertical onto Horizontal Stacking	Obsolete
67002	Buck/ Boost Transformer, 3.9 kVa, 208/230 VAC	$ 819.00
54323	Capacitor 50mfd 440vac 2.5" Dia SN 259 & Above	$ 76.79
117690	Circuit Breaker 1/4 Amp (Low Voltage Circuit)	$ 24.02
54247	Circuit Breaker, On/Off Switch, 15amp	$ 191.43
80178-4P	Clamp, Capacitor 2-1/2" Dia	$ 5.46
89324	Clamp; Hose, 1-9/16" to 2 1/2" Max	$ 5.41
55407	Contactor 230 VAC, 24 VAC Coil STS-3 & STS-5	$ 95.17
54445	Electrical Box Assembly, STS-3	Obsolete
54440	Heat Exchanger	Obsolete
56057	Hose Assembly, Exhaust for Separator, 2 1/4" x 17", 1" Wide Cuff	$ 54.08
54556	Inlet Fitting Assembly; w/Filter for STS Replacement Pump	$ 123.60
54327	Inlet Plumbing Fittings STS-3 Pump	Obsolete
43106	Leveling Foot (4 Per Unit)	$ 7.72
54383	Line Cord Assy 230v	$ 80.03
54160	Pump Accessory Pack	Obsolete
30423	Screw; 8-32 X 3/8, Phil Pan Hd,18-8 Ss (Elect. Box/Motor To Shroud)	$ 2.10
54442	Shipping Packaging Material	Obsolete
54435	Shroud; STS-3 & 5: Welded Assembly	Obsolete
54400	Dual STS Tandem Connection Accessory Kit	$ 322.14
54623	Transformer 230vac To 24 VAC	$ 116.80
55907	Vibration Shock Mount (4 Per Unit)	$ 5.41
30052	Washer; #8, Flat,18-8 Ss (Electrical Box/Motor To Shroud)	$ 2.10
30263	Washer; #8, Lock, Split,18-8 Ss (Electrical Box/Motor To Shroud)	$ 4.20
54068	Wiring Harness Assembly (Electrical Box to Pump)	Obsolete
STS-5 Dry Vacuum		
67002	Buck/Boost Transformer Kit, 3.9 KVA, 208/230 VAC	$ 819.00
54323	Capacitor 50mfd 440vac 2.5" Dia SN 259 & Above	$ 76.79
54333	Capacitor 60 Mfd 440vac 2.5" Dia SN 258 & Below	$ 76.79
117690	Circuit Breaker 1/4 Amp (Low Voltage Circuit)	$ 24.02
54247	Circuit Breaker On/Off Switch 15amp	$ 191.43
80178-4P	Clamp, Capacitor 2-1/2" Dia	$ 5.46
89324	Clamp; Hose, 1-9/16" to 2 1/2" Max	$ 5.41
55407	Contactor 230 VAC, 24 VAC Coil STS-3 & STS-5	$ 95.17
56057	Hose Assembly, Exhaust for Separator, 2 1/4" x 17", 1" Wide Cuff	$ 54.08
54184	Hose; Vent 2-1/4"ID x 36"L,1"W Cuff: Rubber Compound	$ 78.95
54239	Inlet Plumbing Fittings (Motor Side of Flexible Connector)	Obsolete
54359	Inlet Plumbing Fittings, Tank Connect (Side of Flexible Connector)	Obsolete
43106	Leveling Foot (4 Per Unit)	$ 7.72
54383	Line Cord Assy, 230v	$ 80.03
57253	PCONN; Adapt,1-1/2" MNPT x 1-1/2" Barb	$ 21.63
49318	PCONN;Adapter:1/4 FNPT x 1/8 FNPT, Brass	$ 5.25
55219	Pipe Support; 1-1/2", Polypropylene, Black	Obsolete
54150	Pump Accessory Pack	$ 69.89
30453	Screw; 8-32 X 1 1/4, Phil Pan Hd, 18-8 Ss (Elect. Box/Motor to Shroud)	Obsolete
54556	Inlet Fitting Assembly; w/Filter for STS Replacement Pump	$ 123.60
30423	Screw; 8-32 X 3/8, Phil Pan Hd,18-8 Ss (Elect. Box/Motor To Shroud)	$ 2.10
54375	Transformer 230 VAC To 24 VAC (STS-5 & STS-15)	$ 131.94
55907	Vibration Shock Mount (4 Per Unit)	$ 5.41

Part Number	Description	Price
30052	Washer; #8, Flat,18-8 Ss (Electrical Box/Motor To Shroud)	$ 2.10
30263	Washer; #8, Lock, Split,18-8 Ss (Electrical Box/Motor To Shroud)	$ 4.20
54071	Wiring Harness Assembly (Electrical Box to Pump)	Obsolete
STS-15 Dry Vacuum		
117690	Circuit Breaker 1/4 Amp (Low Voltage Circuit)	$ 24.02
54119	Circuit breaker; 3 pole, 250V, 50/60Hz,15a	$ 400.16
89324	Clamp; Hose, 1-9/16" to 2 1/2" Max	$ 5.41
54498	Contactor 3 Pole, 40amp, 24 Volt Coil	$ 68.25
54482	Drip Leg PVC Plumbing Fittings	Obsolete
56057	Hose Assembly, Exhaust for Separator, 2 1/4" x 17", 1" Wide Cuff	$ 54.08
54184	Hose; Vent 2-1/4"ID x 36"L,1"W Cuff: Rubber Compound	$ 78.95
54556	Inlet Fitting Assembly; w/Filter for STS Replacement Pump	$ 123.60
54471	Inlet Plumbing Fittings	Obsolete
43106	Leveling Foot (4 Per Unit)	$ 7.72
54468	Pump Accessory Pack	Obsolete
54375	Transformer 230 VAC To 24 VAC (STS-5 & STS-15)	$ 131.94
56082	Vibration Shock Mount (1 Per Unit)	$ 10.82
55907	Vibration Shock Mount (4 Per Unit)	$ 5.41
54072	Wiring Harness Assembly (STS-15 Elect. Box to Pump)	Obsolete
54073	Wiring Harness Assembly (STS-15 Handy Box to Elect. Box)	Obsolete
STS Accessories		
54400	Dual STS Tandem Connection Accessory Kit	$ 322.14
57169	Clamp; Hose, 1/31" - 2.25" Dia.	$ 7.57
89324	Clamp; Hose, 1-9/16" to 2 1/2" Max	$ 5.41
54580	CleanShield Washout System	$ 999.00
54521	Hose; 1 1/2" ID, White Spiral: Hi-Tech - Blue	$ 25.96
56057	Hose Assembly, Exhaust for Separator, 2 1/4" x 17", 1" Wide Cuff	$ 54.08
30049	Nut; 1/4-20, Hex, Plated	$ 2.10
57253	PConn Adapt, 1 1/2", MNPT 1 1/2" B	$ 21.63
56299	Switch, 6VDC, With Markers	$ 30.28
54350	Tank Accessory Pack; Dry Vacuum	$ 211.97
54538	Adapter Plate Mounting Kit (Old style to new style STS pump)	$ 308.23
54556	Inlet Fitting Assembly; w/Filter for STS Replacement Pump	$ 123.60
56600	Utility Stack Rack Mini: (AS30,STS-5,VS50/50H & smaller - any config)	$1,189.00
56650	Utility Stack Rack XL: (AS 50/70,STS-6/10,VS80/80H - any config)	$1,429.00
CAS 4-Gallon		
57253	Adapter, 1-1/2" MNPT X 1-1/2" Barb Hose, PVC Black	$ 21.63
55711	Cap, Vacuum Relief Valve	$ 10.82
54076	CAS Leg Stand Replacement Kit (31" Long, Incl. Tube Cap PN 77231)	Obsolete
54139	Check Valve Swing 1-1/2" PVC (Bottom of Tank)	$ 73.54
57169	Clamp, Hose 1.31"-2.25" Dia (For 1-1/2" Black Flex Tubing)	$ 7.57
54075	Tank Accessory Pack 4 & 8 Gallon CAS	$ 941.52
54074	Cover Assy Replacement Hardware Kit For 4/8/20 Gal CAS (Stainless); 3 Per Cover	$ 138.43
54660	Drain Assembly (Includes 1-1/2" Check Valve PN 54139)	$ 91.93
57234	Elbow 90 Degree, Street 1-1/2" MNPT X 1-1/2" FNPT PVC	Obsolete
54619	Gasket, CAS Cover	$ 73.54
55616	Vacuum Gauge, 30" Hg 1/8" FNPT	$ 26.78
54184	Hose; Vent 2-1/4"ID x 36"L,1"W Cuff: Rubber Compound	$ 78.95
43106	Leveling Foot (4 Per Unit)	$ 7.72

Part Number	Description	Price
30989	Leveling Foot Standoff 5/16" Id X 5/8" L (4 Per Unit)	Obsolete
54038	Pad Neoprene (For Tank Hold Down Bracket)	Obsolete
54281	Tank Support, Frame Front/Back (2 Per Unit)	Obsolete
54282	Tank Support, Frame Left/Right (2 Per Unit)	$ 47.86
55865	Vacuum Relief Valve	$ 208.73
CAS 8-Gallon New Style		
57253	Adapter 1-1/2" MNPT X 1-1/2" Barb Hose, PVC Black	$ 21.63
55711	Cap, Vacuum Relief Valve	$ 10.82
54076	CAS Leg Stand Replacement Kit (31" Long, Incl. Tube Cap PN 77231)	
54139	Check Valve Swing 1-1/2" PVC (Bottom of Tank)	$ 73.54
57169	Clamp, Hose 1.31" - 2.25" Dia (For 1-1/2"Black Flex Tubing)	$ 7.57
54075	Tank Accessory Pack 4 & 8 Gallon CAS	$ 941.52
54074	Cover Assy Replacement Hardware Kit For 4/8/20 Gal CAS (Stainless); 3 Per Cover	$ 138.43
54660	Drain Assembly (Includes 1-1/2" Check Valve PN 54139)	$ 91.93
57234	Elbow 90 Degree, Street, 1-1/2" MNPT X 1-1/2" FNPT PVC	Obsolete
54619	Gasket, CAS Cover	$ 73.54
55616	Vacuum Gauge, 30" Hg 1/8" FNPT	$ 26.78
54521	Hose; 1 1/2" ID, White Spiral: Hi-Tech - Blue	$ 25.96
54184	Hose; Vent 2-1/4"ID x 36"L, 1"W Cuff: Rubber Compound	$ 78.95
43106	Leveling Foot (4 Per Unit)	$ 7.72
30989	Leveling Foot Standoff 5/16" Id X 5/8" L (4 Per Unit)	Obsolete
54038	Pad Neoprene (For Tank Hold Down Bracket)	Obsolete
54120	Tank Accessory Pack 4 & 8 Gallon CAS	$ 162.23
54281	Tank Support, Frame Front/Back (2 Per Unit)	Obsolete
54282	Tank Support, Frame Left/Right (2 Per Unit)	$ 47.86
55865	Vacuum Relief Valve	$ 208.73
CAS 20-Gallon		
57253	Adapter, 1-1/2" MNPT X 1-1/2"Barb Hose, PVC Black	$ 21.63
55711	Cap, Vacuum Relief Valve	$ 10.82
54077	CAS Leg Stand Replacement Kit 50" L Incl. Tube Cap, Lev. Foot, Clip	Obsolete
54139	Check Valve Swing 1-1/2" PVC (Bottom of Tank)	$ 73.54
57169	Clamp, Hose 1.31" - 2.25" Diameter (For 1-1/2"Black Flex Tubing)	$ 7.57
54075	Tank Accessory Pack 4 & 8 Gallon CAS	$ 941.52
54074	Cover Assy Replacement Hardware Kit For 4/8/20 Gal CAS (Stainless); 3 Per Cover	$ 138.43
54660	Drain Assembly (Includes 1-1/2" Check Valve PN 54139)	$ 91.93
57234	Elbow 90 Degree, Street, 1-1/2" MNPT X 1-1/2" FNPT PVC	Obsolete
54619	Gasket, CAS Cover	$ 73.54
55616	Vacuum Gauge, 30" Hg 1/8" FNPT	$ 26.78
54521	Hose; 1 1/2" ID, White Spiral: Hi-Tech - Blue	$ 25.96
54184	Hose; Vent 2-1/4"ID x 36"L,1"W Cuff: Rubber Compound	$ 78.95
43106	Leveling Foot (4 Per Unit)	$ 7.72
54038	Pad, Neoprene (For Tank Hold Down Bracket)	Obsolete
54120	Tank Accessory Pack 4 & 8 Gallon CAS	$ 162.23
54281	Tank Support, Frame Front/Back (2 Per Unit)	Obsolete
54282	Tank Support, Frame Left/Right (2 Per Unit)	$ 47.86
55865	Vacuum Relief Valve	$ 208.73
A1029	Wall Bracket Mount Left Side Tank	Obsolete
A1028	Wall Bracket Mount Right Side Tank	Obsolete

Part Number	Description	Price
Acadia Amalgam Separator		
A1223	1 1/2 Inch Hose Barb Adaptor (Qty. 2)	$ 29.20
54521	Hose; 1 1/2" ID, White Spiral: Hi-Tech - Blue	$ 25.96
A1384	90-degree Elbow with O-ring	$ 35.69
A1381	90-degree Non-Rotating Elbow with O-ring Spacer & Screw	$ 32.45
A1290	Acadia replacement filter only (without recycling kit)	$ 489.00
A1390	Acadia replacement filter with recycling kit	$ 589.00
A1370	Amalgam recycling kit; includes prepaid shipping label, packaging (replacement filter sold separately)	$ 219.00
A1297	Amalgam Separator Chassis/Mounting Bracket	$ 75.71
A1383	Inlet Filter; for Kit A1380	$ 35.69
A1359	Installation Accessory Kit	$ 98.42
A1380	Kit contains Housing with "O" ring and Filter/Strainer with "O" ring	$ 165.00
A5135	Power supply; boxed and labeled	$ 87.00
A1237	Retaining Clip (Qty. 5)	$ 29.20
57278	PCONN; Coupling,1" Flexible	$ 21.63
57238	Coupler, Flexible, 1 1/2" x 1 1/2"	$ 21.00
H5158	Coupler, Flexible, 2" x 1 1/2"	$ 00.00
H5159	Coupler, Flexible, 2" x 2"	$ 12.50
55941	Hose, PVC 3/4" I.D. Per Foot, Reinforced, Suction/Discharge	$ 7.57
55941	Hose, 1" ID, Reinforced, Per Foot	$ 10.50
54512	Hose, 2" ID, Clear w/Blue Spiral, Per Foot	$ 8.60

Acadia Amalgam Separator - Exploded View

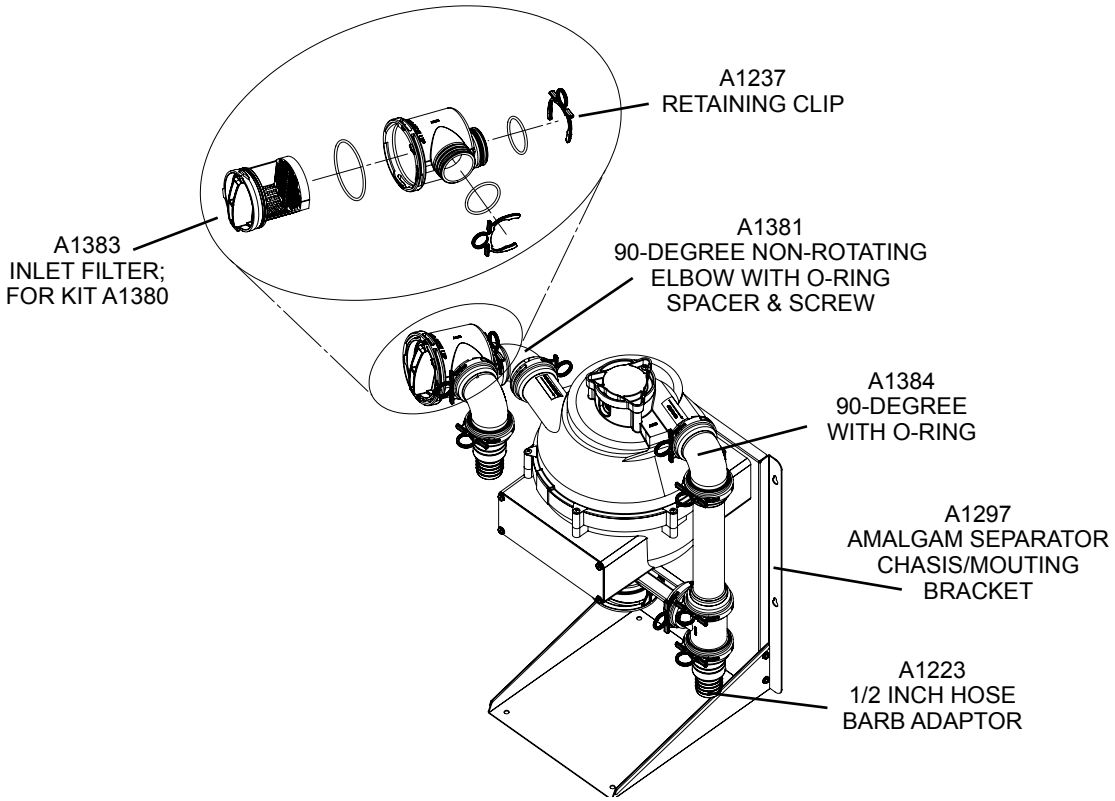

Amalgam Separator

Part Number	Description		Price
Guardian Collector			
A1006	Adapter, 1"Mslip X 25mm Fslip, Grey (Goes Inside Of PVC Inlet)	$	97.34
A1033	Bag, Ziplock 18" X 20" (To Seal Used Box Prior Shipping)	$	4.33
A1057	Kit; Exchange Supplies, Amalgam Separator (needs A1134)	$	144.92
A1093	Certificate Of Disinfection	$	5.25
A1092	O-Ring Lubricant & Container	$	5.20
A1139	PCONN; cap,1.312" id, polyethylene, black	$	21.63
54131	O-Ring, Large 1.112" id X 0.103"Wide (On Adapter PN A1006/A1007)	$	4.33
51571	O-Ring, Small 0.864 id X 0.70 Wide (Top Lid O-Rings, 2 Per Unit)	$	4.33
A1134	Shipping Carton With Label (To Ship Used Box To Recycler) (needs A1057)	$	47.59
A1425	Domestic Shipping Label	$	7.35
4 or 8 Gal CAS With Guardian			
57253	Adapter 1-1/2" MNPT X 1-1/2" Barb Hose PVC Black (4 Per Unit)	$	21.63
54438	Bracket, Separator Tank Hold Down Support (2 Per Unit)	$	9.19
55711	Cap, Vacuum Relief Valve	$	10.82
54074	CAS Cover Replacement Hard Kit	$	138.43
41211	Clamp Drain Hose 9/16"-1 1/4"Dia (For 3/4" Clear PVC, 4 Per Unit)	$	8.82
57169	Clamp, Hose 1.31"-2.25" Diameter (For 1-1/2" Black Flex Tubing)	$	7.57
54141	Drain Fitting Assembly w/ Inlet For Amalgam Collector	$	69.22
54437	Drip Shield Small 4 Gallon CAS	$	280.11
57234	Elbow 90 Degree, 1-1/2" MBPT X 1-1/2" FNPT PVC	$	10.82
54619	Gasket, CAS Cover	$	73.54
55616	Vacuum Gauge, 30" Hg 1/8" FNPT	$	26.78
55941	Hose, PVC 3/4" I.D. Per Foot, Reinforced, Suction/Discharge	$	7.57
54184	Hose; Vent 2-1/4"ID x 36"L,1"W Cuff: Rubber Compound	$	78.95
43106	Leveling Foot (4 Per Unit)	$	7.72
30989	Leveling Foot Standoff 5/16" Id X 5/8" L (4 Per Unit)	$	13.92
A1035	Outlet Fitting Assembly For Guardian Amalgam Collector	$	148.71
54038	Pad, Neoprene (For Tank Hold Down Bracket)	$	9.19
54281	Tank Support, Frame Front/Back (4 Per Unit)	$	63.54
54282	Tank Support, Frame Left/Right (4 Per Unit)	$	47.86
55865	Vacuum Relief Valve	$	208.73

Part Number	Description	Price
Remote Control Panels		
53225-1	Cover Plate, 2-Gang, Four Switch Hole, Etched	$ 47.59
53222-1	Cover Plate, 2-Gang, One Switch Hole, Etched	$ 47.59
53224-1	Cover Plate, 2-Gang, Three Switch Hole, Etched	$ 47.59
53223-1	Cover Plate, 2-Gang, Two Switch Hole, Etched	$ 47.59
53050	Label, Moisture Monitor	$ 5.41
60013	Moisture Monitor Assembly	$ 32.45
53111	Remote control panel; 24V, 1–switch; Needs 2 gang electrical box	$ 259.00
53251	Remote control panel; 24V, 2–switch; Needs 2 gang electrical box	$ 329.00
53250	Remote control panel; 24V, 3–switch; Needs 2 gang electrical box	$ 399.00
53133	Remote control panel; 24V, 4–switch; Needs 2 gang electrical box	$ 429.00
53232	Ring, Designation, Air	$ 5.41
53232-2	Ring, Designation, Air-2	$ 5.41
53232-3	Ring, Designation, Air-3	$ 5.41
53232-4	Ring, Designation, Air-4	$ 5.41
53231	Ring, Designation, Vacuum	$ 5.41
53231-2	Ring, Designation, Vacuum-2	$ 5.41
53231-3	Ring, Designation, Vacuum-3	$ 5.41
53231-4	Ring, Designation, Vacuum-4	$ 5.41
53233	Ring, Designation, Water	$ 5.41
30692	Screw:6-32 X 1/2 Oval Head - Phillips SS	$ 1.31
53048	Switch Assembly, Control Panel, 24v (Rocker)	$ 28.84
56233	Switch, Control Panel, Old Style Rocker	$ 60.56
53202-1	Switch Assembly., Control Panel, Mojave, Cleanshield, Vacuum Equalizer P.B. Switch - 6 VDC LED	$ 72.46
53201-1	Switch Assembly, Control Panel, Push Button, 24V LED	$ 77.04
53202-2	Switch Assembly, Control Panel, Push Button, CAS Washout 6V LED	$ 100.58

Part Number	Description		Price
3/4" Water System Spare Parts (Crimped)			
53286	Ball Valve, 1/4 turn, 3/4" NPT, 500#WOG	$	32.76
53309	Solenoid Coil 115v, 3/4 inch, Asco (lead free, stainless steel valve body)	$	583.80
53311	Solenoid Coil 24v, 3/4 inch, Asco (lead free, stainless steel valve body)	$	601.31
53315	Solenoid Coil retainer, Red Hat	$	10.00
53248	Solenoid Valve & 115v coil, 3/4 inch, Asco (lead free, stainless steel valve body)	$	577.50
53288	Solenoid Valve & 24v coil, 3/4 inch, Asco (lead free, stainless steel valve body)	$	595.00
53097	Water Filter Housing & Filter Replacement Kit (housing, bowl, nipple, and filter)	$	264.26
53106	Water Filter Housing O-Ring, 3/4 inch system (Ametek)	$	14.06
53058	Water Filter Housing Replacement Kit, (Ametek); Upper Housing and Lower Bowl	$	138.43
53035	Water Filter Replacement Element, 5 Micron (Pkg of 2)	$	109.82
53316	Water System, Lower Section 3/4" with Filter	$	529.00
53150	Water System Transformer Assembly	$	469.00
86637	Transformer, 208/230 VAC Step-down to 24 VAC, for #53150	$	73.54
3/4" Water System Spare Parts (Manufactured Prior to January 1, 2014)			
53020	3/4" Water Valve Filter System 24V w/Transformer	$	1,895.00
53020-1	3/4" Water Valve-Filter System 115V	$	1,655.00
53021	3/4" Water Valve System w/o Filter 24V w/Transformer	$	1,395.00
53021-1	3/4" Water Valve System w/o Filter 115V	$	1,055.00
53286	Ball Valve, 1/4 turn, 3/4" NPT, 500#WOG	$	32.76
53031-1	Solenoid Valve & 115v coil, 3/4 inch, Asco (brass valve body)	$	601.31
53031	Solenoid Valve & 24v coil, 3/4 inch, Asco (brass valve body)	$	601.31
53031-2	Solenoid Coil 115v, fits metal housing only (black coil, brass valve body)	$	267.13
53031-5	Solenoid Coil 115v, fits plastic housing only (green coil, brass valve body)	$	285.52
53031-3	Solenoid Coil 24v, fits metal housing only (black coil, brass valve body)	$	285.52
53031-4	Solenoid Coil 24v, fits plastic housing only (green coil, brass valve body)	$	285.52
53097	Water Filter Housing & Filter Replacement Kit (housing, bowl, nipple, and filter)	$	264.26
53058	Water Filter Housing Replacement Kit, (Ametek); Upper Housing and Lower Bowl	$	138.43
53106	Water Filter Housing O-Ring, 3/4 inch system (Ametek)	$	14.06
53019	Water Filter Housing O-Ring (Clear bowl, Cuno)	$	23.79
53152	Water Filter Housing O-Ring for Filter Assembly with/On-Off turn Valve (Cuno)	$	118.97
53035	Water Filter Replacement Element, 5 Micron (Pkg of 2)	$	109.82
53150	Water System Transformer Assembly	$	469.00
86637	Transformer, 208/230 VAC Step-down to 24 VAC, for #53150	$	73.54

Part Number	Description		Price
1" Water System Spare Parts (Crimped)			
53287	Ball Valve, 1/4 turn, 1" NPT, 500#WOG	$	22.25
53310	Solenoid Coil 115V coil for 1" solenoid valve, (lead free, stainless steel valve body)	$	162.23
53312	Solenoid Coil 24v for 1" solenoid valve, (lead free, stainless steel valve body)	$	264.97
53315	Solenoid Coil retainer, Red Hat	$	10.00
53249	Solenoid Valve 115v, 1 inch, Asco (lead free, stainless steel valve body)	$	1,157.00
53290	Solenoid Valve 24v, 1 inch, Asco (lead free, stainless steel valve body)	$	1,030.00
53172-1	Water Filter Housing O-Ring, 1 inch system (Ametek)	$	33.53
53172-2	Water Filter Housing Replacement Filter Bowl (Ametek)	$	168.71
53172	Water Filter Housing Replacement Kit, (Ametek); Upper housing and lower bowl	$	308.23
53153	Water Filter Replacement Element (Pkg of 1)	$	86.94
53245	Water System Transformer Assembly 80VA for 1" system	$	519.00
1" Water System Spare parts (Manurfactured Prior to January 1, 2014)			
53170	1" Water Valve Filter System 24V w/Transformer	$	2,079.00
53171	1" Water Valve-Filter System 115V	$	1,569.00
53173	1" Water Valve System w/o Filter 24V w/Transformer	$	1,719.00
53174	1" Water Valve w/o Filter 115V	$	1,369.00
53287	Ball Valve, 1/4 turn, 1" NPT, 500#WOG	$	22.25
53156	Gate Valve, Brass, 1" NPT	$	107.10
53195	Solenoid Coil 115v, 1 inch, Asco (brass valve body)	$	255.23
53194	Solenoid Coil 24v, 1 inch, Asco (green coil, brass valve body)	$	289.84
53155	Solenoid Valve & 115v , 1 inch, Asco (brass valve body)	$	877.10
53154	Solenoid Valve & 24v coil, 1 inch, Asco (brass valve body)	$	811.13
53172-1	Water Filter Housing O-Ring, 1 inch system (Ametek)	$	33.53
53172-2	Water Filter Housing Replacement Filter Bowl (Ametek)	$	168.71
53172	Water Filter Housing Replacement Kit, (Ametek); Upper housing and lower bowl	$	308.23
53153	Water Filter Replacement Element (Pkg of 1)	$	86.94
53150	Water System Transformer Assembly (I inch systems prior to 20 May 2014)	$	469.00
86637	Transformer, 208/230 VAC Step-down to 24 VAC, for #53150	$	73.54

Part Number	Description	Price
A/T 2000® XR Major Assemblies		
45200	A/T 2000 XR Base Assembly	$ 6,559.88
45800	A/T 2000 XR Cover Assembly	$ 5,990.99
45500	Developer Rack, AT2000 XR (See Exchange Parts)	$ 1,135.80
45505	Fixer Rack, AT2000 XR (See Exchange Parts)	$ 1,102.06
45100	Leveling Base Kit, A/T 2000XR (Grey)	$ 250.27
43106	Leveling Foot (4 Per Unit)	$ 7.72
45510	Wash/Dry Rack, AT2000 XR (See Exchange Parts)	$ 2,056.80
45800L	Cover Assembly Laquer	$ 5,486.25
A/T 2000 XR Cover Assembly PN 45800		
43811	Air Heater Assembly, 350w	$ 200.66
43122	Bushing; Nylon, Split: Heyco #2872	$ 5.51
43343-1	Cable Assembly; Dental Fan Panel	$ 65.05
45910	Cover Interlock Switch	$ 107.42
45351	Cover/Tray Insert With Light Seal	$ 90.41
45360	Cover; Top With Inserts, Gray Color	$ 629.53
43530	Dryer Fan	$ 506.05
43330	Dryer Heater Assembly	$ 905.68
45415	Electronics Module (See Exchange Parts)	$ 3,596.31
43309-1	Film Receptacle Divider	$ 5.51
44482	Film Sensor Assembly (Shutter PCB)	$ 143.22
43587	Hinge Block	$ 12.13
43121	Plate; Vapor Barrier, 304 S/S, A/T 2000	$ 9.37
44422	Power Switch	$ 11.03
45982	Shipping Material For Cover For Returns, AT2000	$ 61.74
43584	Shutter Assembly	$ 52.92
43658	Shutter Guard	$ 73.87
A/T 2000 XR Base Assembly PN 45200		
45200-1	Base Assembly, W/O Drive Block & Circ Assembly	$ 3,869.78
45230	Base Assembly Complete with Water Recirculation	$ 6,651.75
45201	Base Sub-Assembly; A/T 2000 XR	$ 956.97
45440	Base Wiring Harness, Complete	$ 506.05
43232	Bearing, Circulator Magnet Plastic As Of S/N 464706	$ 40.79
43885	Bottom Plate Assembly, AT 2000	$ 93.71
43122	Bushing; Nylon, Split: Heyco #2872	$ 5.51
45262	Circulator Drawer Assembly W/O Tank Magnets	$ 437.69
45691	Circulator Drawer Replacement Kit (Includes Tank Magnets)	$ 538.02
43233	Circulator Magnet (Chem Tanks)	$ 46.31
43267	Circulator Magnets (On Cir Motors)	$ 56.23
43695	Circulator Motor Assembly, w/ Fan	$ 143.33
43223	Drive Shaft Clamp - Black	$ 8.82
49963	Clamp, Tank Drain	$ 5.25
45445	Connector Plate, Etched	$ 49.89
44063	Dev Tube & Cap Assembly	$ 46.31
43384	Developer Circulator Cover - Black	$ 14.33

Part Number	Description	Price
43357	Drain Hose Strap	$ 7.17
44361	Drain Hose, Developer (Black) (6ft 1/2" Id)	$ 30.87
44362	Drain Hose, Fixer (Red) (6ft 1/2"Id)	$ 49.61
44363	Drain Hose, Water (White) (6ft 1/2"Id)	$ 30.87
44206	Drain Manifold, Molded, A/T 2000	$ 55.13
43286	Drain Tube Assembly - Black	$ 26.46
43287	Drain Tube Assembly - Red	$ 26.46
43270	Drain Tube Assembly - Tan	$ 22.05
43271	Drain Tube Washer	$ 5.51
45240	Drive Block Assembly 2000 XR	$ 1,448.69
43259	Electrical Compartment Cover	$ 88.20
45975	EMI/RFI Filter Replacement, IEC Power Entry	$ 55.13
43238-1	Film Feeder, Guide Block	$ 11.03
45380	Film Inlet Assembly (Includes P/N 45567 & P/N 43238-1)	$ 44.10
45567	Film Inlet, Silkscreened	$ 39.69
43385	Fixer Circulator Cover - Red	$ 14.33
44064	Fixer Tube & Cap Assembly	$ 37.49
90219	Fuse Holder Old Style - Brown Box	$ 14.33
41914	Fuse, Delayed Action, 8 Amp, (Pkg. Of 5)	$ 33.08
43531	Screen For Solenoid	$ 5.51
45950	Heater Pad Assembly Replacement	$ 323.03
45920	Line Cord Replacement, 115 V Plug IEC Socket	$ 36.38
45043	Locking Ring For 45042	$ 15.44
43220	Motor, Circulator (Without Motor Magnet)	$ 74.97
30249	NUT; 8-32, HEX,18-8 S.S.	$ 4.20
45985	PCB Internal Recirculating Pump	$ 95.92
45437	Plate; Adapter, IEC, Inside Mount, A/T 2000 XR /AP2010	$ 4.96
45278	Plate; Dual Fuse Mount, Blk Anod	$ 11.03
45439	Plate; Terminal Block Mount, A/T 2000 XR / AP2010	$ 19.85
43121	Plate; Vapor Barrier, 304 S/S, A/T 2000	$ 9.37
49793	Poppet Valve Kit (Incl. 2 Valves & 2 O-Rings) Gorman Rupp Pumps	$ 81.40
45550	Water Pressure Regulator Kit (Up To 40 PSI), AT 2000	$ 137.81
45070	Water Recirculating Pump Assembly	$ 461.95
44265	Replenisher Assembly	$ 596.79
45935	Replenisher Assembly w/Circ. Drawer Assembly	$ 1,067.22
44044	Replenisher Developer Inlet Tubing (Blk) - 96"	$ 24.26
44042	Replenisher Developer Outlet Tubing (Blk) - 26"	$ 22.05
44043	Replenisher Fixer Inlet Tubing (Red) - 96"	$ 24.26
44041	Replensiher Fixer Outlet Tubing (Red) - 18"	$ 5.51
30998	Rivet; Push: Heyco #9054	$ 5.25
45042	Rt Angle Cap (White) Dev Replensisher	$ 44.10
30431	Screw; 6-32 X 3/8, Phil Pan Hd,1	$ 4.20
45982	Shipping Material For Cover For Returns, AT2000	$ 61.74
41127	Snap Ring: M8 Truarc #5100 31-H	$ 8.82
43980	Solenoid Assembly (No Flow Restrictor)	$ 132.30

Part Number	Description		Price
45980	Solenoid, Water	$	122.38
41286	Teflon Washer (Between Circulator Magnet & Bearing)	$	4.41
45970	Thermistor Replacement Kit, A/T 2000	$	73.87
30552	Thumb Screw, Circulator Cover	$	1.31
45048	Tubing cut to 9'	$	29.77
44210	Tubing Fixer Drain	$	7.72
44211	Tubing Water Drain	$	7.72
44209	Tubing, Developer Drain	$	22.05
45945	Varistor Replacement Kit,150v	$	222.71
43189	Wash Tank Drain Tube Plug Kit	$	14.33
30052	Washer; #8, Flat,18-8 Ss (Electrical Box/Motor To Shroud)	$	2.10
30263	Washer; #8, Lock, Split,18-8 Ss (Electrical Box/Motor To Shroud)	$	4.20
49165	Water Hose	$	44.10
45221	Water Inlet J Tube	$	14.33
45450	Water Sensor Assembly; Lugged, AT 200	$	66.15
45070	Water Recirculating Pump Assembly	$	461.95
A/T 2000® XR Drive Block Assembly PN 45240			
43244	Bearing, Shaft	$	7.72
44275	Capacitor, Drive Motor (ECM Motor)	$	18.74
45240	Drive Block Assembly 2000 XR	$	1,448.69
43247	Drive Chain	$	51.82
45472	Drive Motor Assembly	$	948.23
43223	Drive Shaft Clamp - Black	$	8.82
43246	Drive Shaft Clamp - Red	$	8.82
43243	Driver Gear (12 Tooth)	$	11.03
43242	Drive Shaft; Main, A/T 2000	$	114.66
30249	NUT; 8-32, HEX,18-8 S.S.	$	4.20
43254	Rack Latch - Black	$	7.72
41127	Snap Ring: M8 TRuarc #5100 31-H	$	8.82
45970	Thermistor Replacement Kit, A/T 2000	$	73.87
30052	Washer; #8, Flat,18-8 Ss (Electrical Box/Motor To Shroud)	$	2.10
30263	Washer; #8, Lock, Split,18-8 Ss (Electrical Box/Motor To Shroud)	$	4.20
45450	Water Sensor Assembly; Lugged, AT 200	$	66.15
A/T 2000 XR Wash & Dry Assembly PN 45510			
43508	Axle, Shaft	$	18.74
43513	Drive Gear (14 Tooth)	$	11.03
43503	Gear (28 Tooth)	$	5.51
43504	Gear (36 Tooth)	$	5.51
43520	Gear (60 Tooth)	$	8.82
43736	Gear Replacement Kit (28, 36, 60 Teeth Gears, Incl. 1/8" Drillbit)	$	46.31
43694	Gear Replacement Kit Idler (14 Tooth Gear Incl. #14 Drillbit)	$	57.75
43527	Guide Roller	$	42.72
41292	Idler Gear (14 Tooth) 3/16" Thick	$	5.51
41307	Inner Air Baffle Flat, A/T 2000	$	22.05
43526	Outer Air Baffle U-Shape, AT2000	$	84.89

Part Number	Description	Price
43518	Plastic Roller	$ 44.10
43518W	Plastic Roller - Wash/Dry Rack Only	$ 44.10
43512	Right End Plate, (Grey)	$ 175.30
43519	Rubber Roller	$ 84.89
41821	Rubber Roller Spacer, Black	$ 5.51
41284	Rubber Roller Spacer, White	$ 4.41
30567	Screw #7 X 5/8"L Phillips Pan Head Stainless	$ 5.25
43509	Shaft Gear (24 Tooth)	$ 8.82
41285	Spacer Bar	$ 13.78
43517	Spacer Retainer	$ 7.72
43524	Spacer Washer	$ 7.72
45501	Spacer, Nylon	$ 5.51
43514	Spacer; End Racks, Black	$ 11.03
45102	Carton; A/T 2000 XR	$ 59.54
43199	Styrofoam; Set of 5: for A/T 2000	$ 149.94

A/T 2000® XR
Parts Breakdown

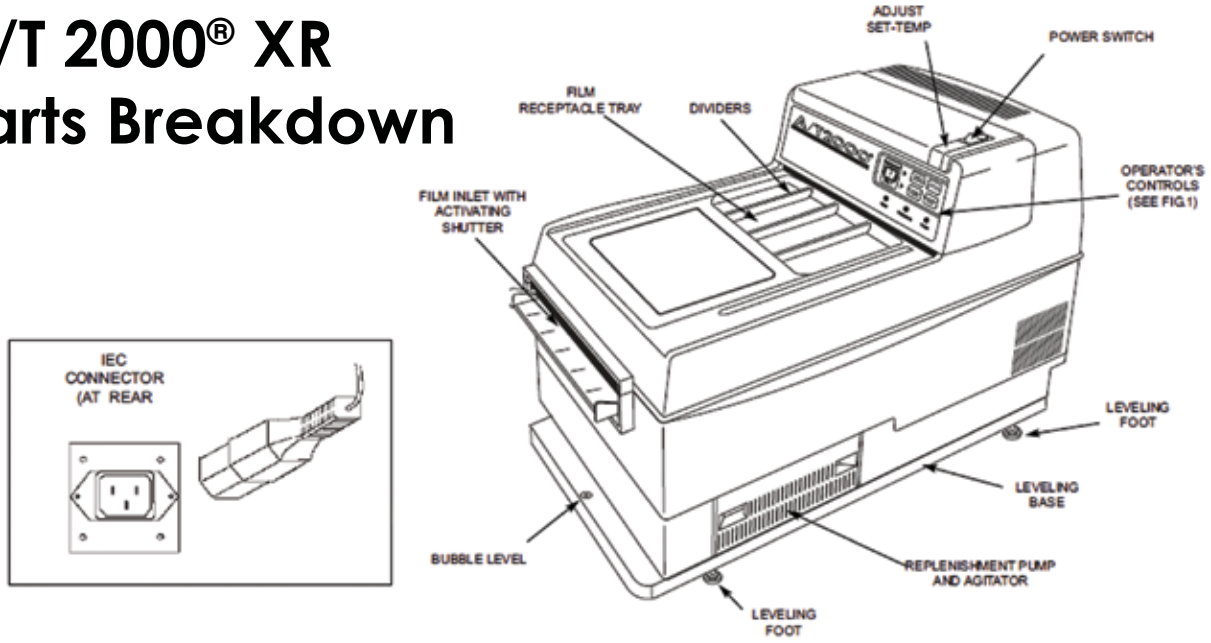

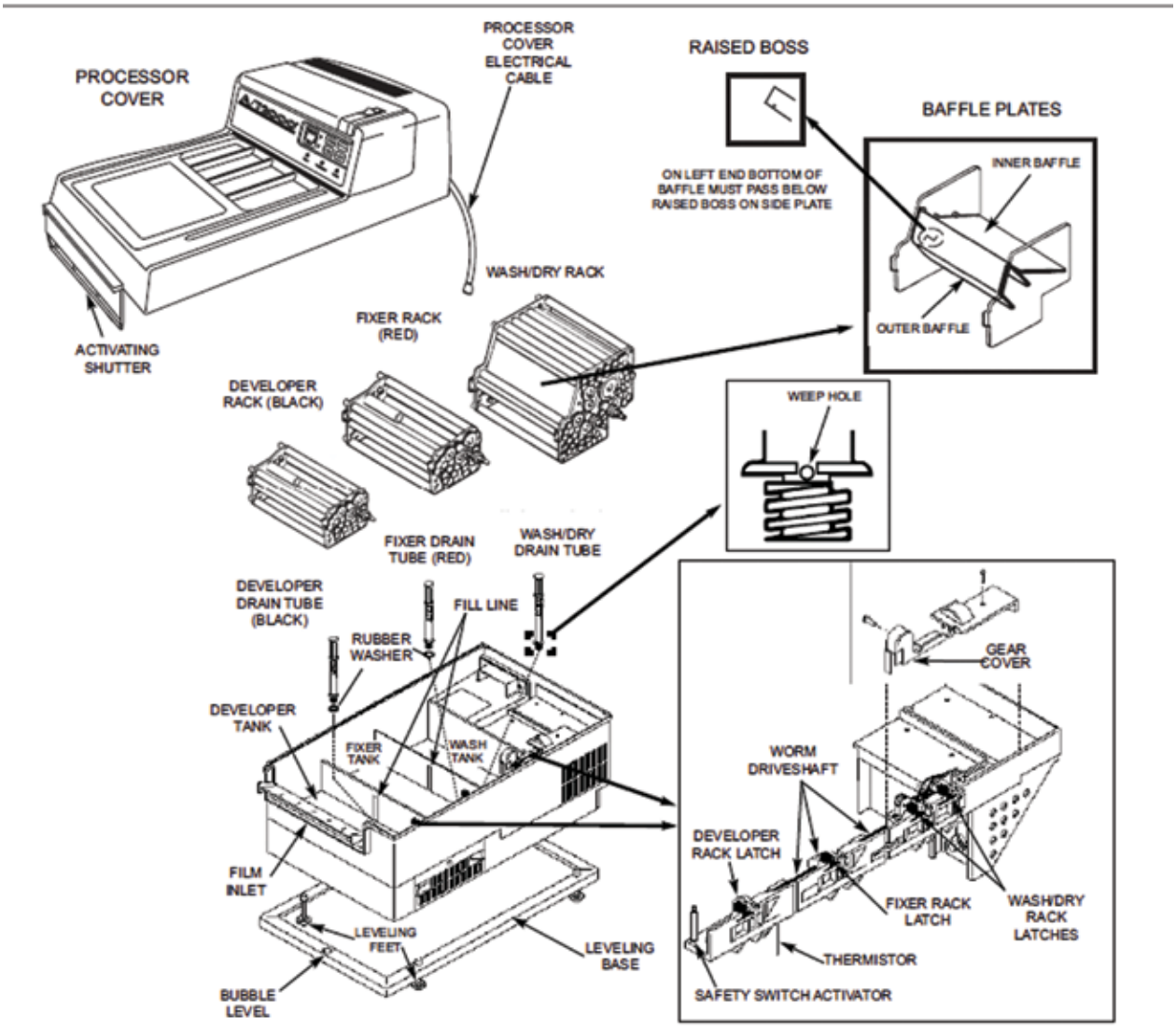

Part Number	Description		Price
A/T 2000® XR Fixer Rack PN 45505			
43508	Axle Shaft	$	18.74
43513	Drive Gear (14 Tooth)	$	11.03
43507	End Plate (Red)	$	100.80
43503	Gear (28 Tooth)	$	5.51
43504	Gear (36 Tooth)	$	5.51
43736	Gear Replacement Kit (28, 36, 60 Teeth Gears, Incl. 1/8" Drillbit)	$	46.31
43694	Gear Replacement Kit, Idler 14 Tooth (Incl. #14 Drillbit)	$	57.75
43527	Guide Roller	$	42.72
43516	Handle	$	15.44
41292	Idler Gear (14 Tooth) 3/16"Thick	$	5.51
43518	Plastic Roller	$	44.10
41821	Rubber Roller Spacer, Black	$	5.51
41284	Rubber Roller Spacer, White	$	4.41
30567	Screw #7 X 5/8"L Phillips Panhead Stainless	$	5.25
43509	Shaft Gear (24 Tooth)	$	8.82
41285	Spacer Bar	$	13.78
43517	Spacer Retainer	$	7.72
43524	Spacer Washer	$	7.72
45501	Spacer, Nylon	$	5.51
A/T 2000 XR Developer Rack PN 45500			
43508	Axle Shaft	$	18.74
43513	Drive Gear (14 Tooth)	$	11.03
43502	End Plate (Black)	$	97.02
43503	Gear (28 Tooth)	$	5.51
43504	Gear (36 Tooth)	$	5.51
43736	Gear Replacement Kit (28, 36, 60 Teeth Gears, Incl. 1/8" Drillbit)	$	46.31
43694	Gear Replacement Kit, Idler (14 Tooth, Incl. #14 Drillbit)	$	57.75
43527	Guide Roller	$	42.72
43516	Handle	$	15.44
41292	Idler Gear (14 Tooth) 3/16" Thick	$	5.51
43518	Plastic Roller	$	44.10
43519	Rubber Roller	$	84.89
41284	Rubber Roller Spacer, White	$	4.41
43509	Shaft Gear (24 Tooth)	$	8.82
41285	Spacer Bar	$	13.78
43517	Spacer Retainer	$	7.72
43524	Spacer Washer	$	7.72
45501	Spacer, Nylon	$	5.51
A/T 2000 Plus Major Assemblies			
43500	Developer Rack (See Exchange Parts)	$	1,135.80
43505	Fixer Rack (See Exchange Parts)	$	1,102.06
45100	Leveling Base Kit, A/T 2000XR (Grey)	$	250.27
43106	Leveling Foot (4 Per Unit)	$	7.72
43510	Wash/Dry Rack (See Exchange Parts)	$	2,056.80

Part Number	Description		Price
A/T 2000® Plus Cover Assembly			
43811	Air Heater Assembly, 350w	$	200.66
43343-1	Cable Assembly; Dental Fan Panel	$	65.05
43530	Dryer Fan	$	506.05
43330	Dryer Heater Assembly	$	905.68
44415	Electronics Module (See Exchange Parts)	$	3,596.31
44482	Film Sensor Assembly (Shutter PCB)	$	143.22
43587	Hinge Block	$	12.13
44422	Power Switch	$	11.03
45982	Shipping Material For Cover For Returns, AT2000	$	61.74
43584	Shutter Assembly	$	52.92
43658	Shutter Guard	$	73.87
A/T 2000 Plus Base Assembly			
45201	Base Sub-Assembly; A/T 2000 XR	$	956.97
44440	Base Wiring Harness, Complete	$	210.00
43232	Bearing, Circulator Magnet Plastic As Of S/N 464706	$	40.79
43885	Bottom Plate Assembly, AT 2000	$	93.71
45262	Circulator Drawer Assembly W/O Tank Magnets	$	437.69
45691	Circulator Drawer Replacement Kit (Includes Tank Magnets)	$	538.02
43233	Circulator Magnet (Chem Tanks)	$	46.31
43220	Motor, Circulator (Without Motor Magnet)	$	74.97
43695	Circulator Motor Assembly, w/ Fan	$	143.33
49963	Clamp, Tank Drain	$	5.25
43384	Developer Circulator Cover - Black	$	14.33
43357	Drain Hose Strap	$	7.17
44361	Drain Hose, Developer (Black) (6ft 1/2" Id)	$	30.87
44362	Drain Hose, Fixer (Red) (6ft 1/2"Id)	$	49.61
44363	Drain Hose, Water (White) (6ft 1/2"Id)	$	30.87
44206	Drain Manifold, Molded, A/T 2000	$	55.13
43286	Drain Tube Assembly - Black	$	26.46
43287	Drain Tube Assembly - Red	$	26.46
43270	Drain Tube Assembly - Tan	$	22.05
43271	Drain Tube Washer	$	5.51
44240	Drive Block Assembly, A/T 2000	$	1,367.10
43267	Circulator Magnets (On Cir Motors)	$	56.23
43259	Electrical Compartment Cover	$	88.20
43385	Fixer Circulator Cover - Red	$	14.33
90219	Fuse Holder Old Style - Brown Box	$	14.33
41914	Fuse, Delayed Action, 8 Amp, (Pkg. Of 5)	$	33.08
43290	Heater Bar Assembly	$	648.27
43436	Line Cord	$	34.95
43362	O-Ring For Heater Bar	$	5.51
49793	Poppet Valve Kit (Incl. 2 Valves & 2 O-Rings) Gorman Rupp Pumps	$	81.40
43224-1	Remote Water Solenoid Assembly	$	471.87
44265	Replenisher Assembly	$	596.79

Part Number	Description		Price
44044	Replenisher Developer Inlet Tubing (Blk) - 96"	$	24.26
44042	Replenisher Developer Outlet Tubing (Blk) - 26"	$	22.05
44043	Replenisher Fixer Inlet Tubing (Red) - 96"	$	24.26
44041	Replensiher Fixer Outlet Tubing (Red) - 18"	$	5.51
45935	Replenisher Assembly w/Circ. Drawer Assembly	$	1,067.22
43531	Screen For Solenoid	$	5.51
43931	Solenoid Repl Kit	$	128.99
43179	Solenoid, Elbow	$	8.82
41286	Teflon Washer (Between Circulator Magnet & Bearing)	$	4.41
30552	Thumb Screw, Circulator Cover	$	1.31
44210	Tubing Fixer Drain	$	7.72
44211	Tubing Water Drain	$	7.72
44209	Tubing, Developer Drain	$	22.05
43189	Wash Tank Drain Tube Plug Kit	$	14.33
41320	Washer; Garden Hose: 5/8id X 1Od	$	5.51
43397	Water Inlet Tube Assembly	$	18.74
43447	Water Level Sensor	$	66.15
A/T 2000 Plus Drive Block Assembly			
43244	Bearing, Shaft	$	7.72
44275	Capacitor, Drive Motor (ECM Motor)	$	18.74
44240	Drive Block Assembly, A/T 2000	$	1,367.10
43247	Drive Chain	$	51.82
43243	Drive Gear (12 Tooth)	$	11.03
44472	Drive Motor Assembly	$	904.05
43223	Drive Shaft Clamp - Black	$	8.82
43246	Drive Shaft Clamp - Red	$	8.82
43242	Drive Shaft; Main, A/T 2000	$	114.66
43254	Rack Latch - Black	$	7.72
41127	Snap Ring: M8 TRuarc #5100 31-H	$	8.82
43447	Water Level Sensor	$	66.15
A/T 2000 Plus Wash Rack			
43508	Axle, Shaft	$	18.74
43513	Drive Gear (14 Tooth)	$	11.03
43512	Right End Plate, (Grey)	$	175.30
43514	Spacer; End Racks, Black	$	11.03
43503	Gear (28 Tooth)	$	5.51
43504	Gear (36 Tooth)	$	5.51
43520	Gear (60 Tooth)	$	8.82
43736	Gear Replacement Kit (28, 36, 60 Teeth Gears, Incl. 1/8" Drillbit)	$	46.31
43694	Gear Replacement Kit Idler, 14 Tooth (Includes #14 Drillbit)	$	57.75
43527	Guide Roller	$	42.72
41292	Idler Gear (14 Tooth) 3/16" Thick	$	5.51
41307	Inner Air Baffle Flat, A/T 2000	$	22.05
43526	Outer Air Baffle U-Shape, AT2000	$	84.89
43518	Plastic Roller	$	44.10

Part Number	Description		Price
43518W	Plastic Roller - Wash/Dry Rack Only	$	44.10
43519	Rubber Roller	$	84.89
41821	Rubber Roller Spacer, Black	$	5.51
41284	Rubber Roller Spacer, White	$	4.41
30567	Screw, #7 X 5/8"L Phillips Panhead Stainless	$	5.25
43509	Shaft Gear (24 Tooth)	$	8.82
41285	Spacer Bar	$	13.78
43517	Spacer Retainer	$	7.72
43524	Spacer Washer	$	7.72
A/T 2000® Plus Fixer Rack			
43508	Axle Shaft	$	18.74
43513	Drive Gear (14 Tooth)	$	11.03
43507	End Plate	$	100.80
43514	Spacer; End Racks, Black	$	11.03
43503	Gear (28 Tooth)	$	5.51
43504	Gear (36 Tooth)	$	5.51
43736	Gear Replacement Kit (28, 36, 60 Teeth Gears, Incl. 1/8" Drillbit)	$	46.31
43694	Gear Replacement Kit, Idler, 14 Tooth (Incl. #14 Drillbit)	$	57.75
43527	Guide Roller	$	42.72
43516	Handle	$	15.44
41292	Idler Gear (14 Tooth) 3/16"Thick	$	5.51
43518	Plastic Roller	$	44.10
43519	Rubber Roller	$	84.89
41821	Rubber Roller Spacer, Black	$	5.51
41284	Rubber Roller Spacer, White	$	4.41
30567	Screw, #7 X 5/8"L Phillips Panhead Stainless	$	5.25
43509	Shaft Gear (24 Tooth)	$	8.82
41285	Spacer Bar	$	13.78
43517	Spacer Retainer	$	7.72
43524	Spacer Washer	$	7.72
A/T 2000 Plus Developer Rack			
43508	Axle Shaft	$	18.74
43513	Drive Gear (14 Tooth)	$	11.03
43502	End Plate	$	97.02
43514	Spacer; End Racks, Black	$	11.03
43503	Gear (28 Tooth)	$	5.51
43504	Gear (36 Tooth)	$	5.51
43736	Gear Replacement Kit (28, 36, 60 Teeth Gears, Incl. 1/8" Drillbit)	$	46.31
43694	Gear Replacement Kit Idler, 14 Tooth (Includes #14 Drillbit)	$	57.75
43527	Guide Roller	$	42.72
43516	Handle	$	15.44
41292	Idler Gear (14 Tooth) 3/16" Thick	$	5.51
43518	Plastic Roller	$	44.10
43519	Rubber Roller	$	84.89
41284	Rubber Roller Spacer, White	$	4.41

Part Number	Description		Price
30567	Screw, #7 X 5/6"L Phillips Panhead Stainless	$	5.25
43509	Shaft Gear (24 Tooth)	$	8.82
41285	Spacer Bar	$	13.78
43517	Spacer Retainer	$	7.72
43524	Spacer Washer	$	7.72
Accessories for A/T 2000 Plus, & 2000 XR			
40270	Air Tech Developer & Fixer	$	104.00
40280	Air Tech Starter Kit; Case Of 6 12-oz Bottles	$	79.50
44170	Chemistry Recovery Containers-Two 2 1/2 Gal.	$	130.00
44160	Chemistry Recovery Containers-Two 5 Gal.	$	151.00
45150	Chemistry Tray	$	36.38
40140	Cleaning Film - Pkg Of 12	$	77.00
45110	Daylight Loader; A/T 2000XR; Gray	$	1,808.00
43500	Developer Rack	$	1,135.80
43309-1	Film Divider	$	5.51
43505	Fixer Rack (See Exchange Parts)	$	1,102.06
43945	Formula 2000 Plus, Twin Pack	$	71.00
45100	Leveling Base Kit, A/T 2000XR (Grey)	$	250.27
43106	Leveling Foot (4 Per Unit)	$	7.72
43115	Prop Stick	$	80.48
43699	Recovery Drain Hose Kit (Separate Hoses For Dev+Fix)-A/T 2000	$	200.66
40035	Sponge, Black	$	5.51
40034	Sponge, Orange	$	5.51
43965	Spray 2000 Plus	$	56.00
45054	Wall Chart; At 2000 XR	$	8.40
43510	Wash/Dry Rack	$	2,056.80
45550	Water Pressure Regulator Kit (Up To 40 PSI), AT 2000	$	137.81
45900-DVD	DVD; A/T 2000 XR	$	50.40
45055	5 Gallon Water Container	$	95.92
Panoramic DLL For 2000 Plus, & 2000 XR			
43117-4	Adapter; Mount Used To Mount DLL To Base (Between Machine & DLL)	$	74.97
44637	Amber View Glass	$	30.87
45630	Cover w/View Glass (Grey)	$	449.82
40153	Cuff Assembly (One Per Unit) for Panoramic DLL	$	316.79
43117-3	Felt Gasket Used To Mount DLL To Base, (Between Machine & DLL)	$	12.13
43117-1	Foam Gasket (Between Machine & DLL)	$	14.33
44622	Gasket; Cover, DLL	$	11.03
40154	Gasket-Holds Cuff	$	97.02
43114	Kit; Hardware, A/T 2000 DLL	$	18.74
45110	Panoramic Daylight Loader; Fits All A/T2000 Models	$	1,738.00
44647	Red View Glass S/N 6720 & Above	$	131.20
45118	Support Frame Assy Kit, Daylight Loader	$	367.13
43995	View Glass; Red, A/T 2000 DLL Old Style	$	100.33

Peri-Pro® III Parts Breakdown

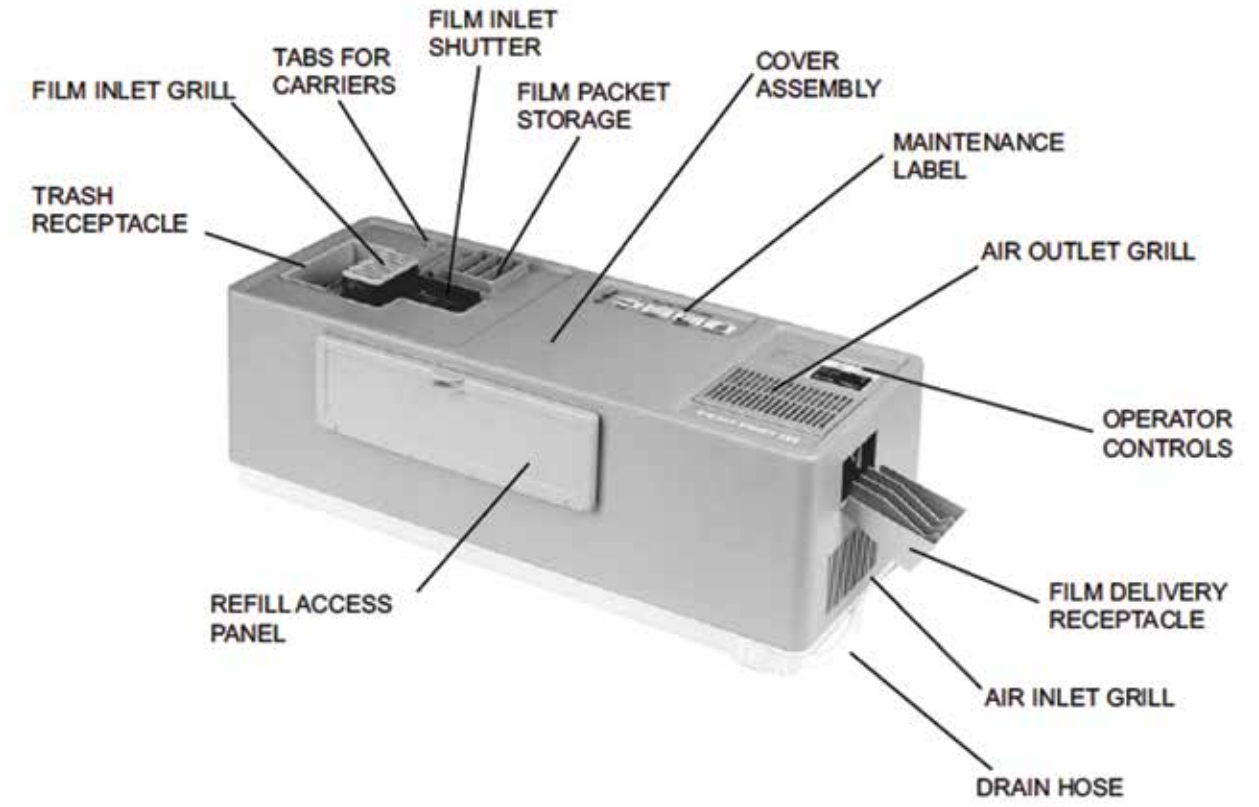

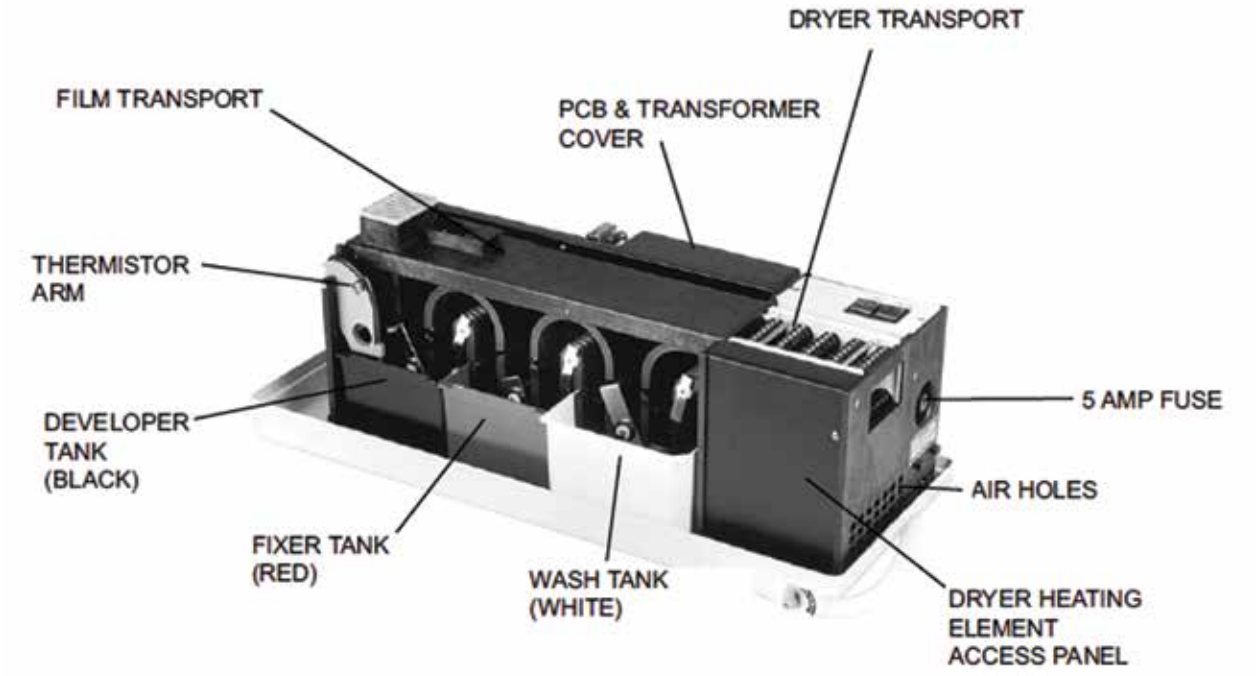

Part Number	Description	Price
Peri-Pro® III		
94640	Access Door; With Filling Label	$ 24.26
94993	Base w/Drain Port & Hose Kit	$ 154.35
94310	Cover Modification; Drive Motor Cover, Peri-Pro	$ 103.64
90213	Cover Plate, dryer, front	$ 33.08
90212	Cover Plate, dryer, rear	$ 22.05
93063	Cover; PCB & Transformer, Peri-Pro III	$ 12.13
90750	Daylight Loader Hole Plug Kit	$ 30.32
94120	Drain Socket, Elbow	$ 5.51
94994	Drain Valve Replacement Kit w/Panel Nut, With Hoses	$ 70.56
94211	Dryer Fan Shroud	$ 37.49
94630	Dryer Heater Replacement Kit, 370w (35 Ohms) Black Leads	$ 109.15
90400	Dryer Transport	$ 171.99
94996	Dryer Transport Gear Train Replacement Kit	$ 52.92
90880	Fan & Motor Assembly, Dryer, 115v	$ 156.56
90555	Film Inlet Grill	$ 12.13
90810	Film Receptacle W/3 Dividers, Peri-Pro	$ 28.67
90219	Fuse Holder Old Style - Brown Box	$ 14.33
90265	Fuse; 5 Amp,115V, (Pkg of 5)	$ 17.64
94525	Gear Idler, 18 Tooth, Dovetail Lock (Dryer Transfer)	$ 7.72
94519	Gear Idler, 21 Tooth, Dovetail Lock (Dryer Transfer)	$ 7.72
94545	Gear Train Cover	$ 7.72
94995	Gear, Main Drive, 66 Tooth	$ 103.64
90611	Heater Grill	$ 11.03
94410	Heater Harness Assembly	$ 144.43
94970	Heater Plate Replacement Kit	$ 338.42
94925	Light Suppressor Kit	$ 3.31
94991	Main Cover	$ 401.31
90147	Main Drive Motor Replacement Kit	$ 382.12
94500	Main Transport, Peri Pro III	$ 1,359.25
90226-1	Middle Plate	$ 88.20
94450	PC Board	$ 292.16
94275	Plate Switches, Stamped Peri-Pro III	$ 24.26
94134	Power Cord 115v	$ 96.47
94269	Power Switch/On Light, Amber	$ 22.05
94977	Process Switch/Ready Light, Green	$ 29.77
90127	Retaining Ring For Dryer Fan	$ 7.72
94111	Side Plate	$ 92.61
117327	Socket, Thermal Fuse	$ 5.51
94278	Thermal Fuse Dryer - 98 Deg.C - Yellow Band	$ 22.05
94976	Thermistor Arm Replacement Kit	$ 36.38
94975	Thermistor Probe Replacement Kit	$ 100.33
94461	Transformer, 40va, 120v-24v, Chemistry Heating System	$ 95.92
94124	Tube, Drain, 48", White	$ 22.05
94139	Valve Handle Only	$ 5.51

Part Number	Description		Price
94130	Wash Tank Assy, White w/Drain Port & (60604) O-Ring for PP III	$	49.61
94039	Wash Tank Replacement Kit, w/o Drain System	$	43.00
Peri-Pro® III Main Transport			
90522	Bearing,"U" Transfer Arm	$	7.72
90523	Bushing "L" Transfer Arm	$	7.72
90524	Bushing "U" Transfer Arm	$	5.51
94550	Gear & Shaft Assy, Large "L" Transfer Arm, Developer	$	33.08
90550	Gear & Shaft Assy;"L" Transfer Arm W/#90516 Gear	$	22.05
90519	Gear Idler, 24 Tooth	$	7.72
90516	Gear Transfer Arm, 24 Tooth	$	7.72
90518	Gear Transfer Arm, 24 Tooth	$	8.82
90517	Gear Transfer Arm, 60 Tooth	$	11.03
94501	Gear, 30 Tooth Speed Reducer, On Top Of 90517 Developer Gear	$	11.03
90521	Gear, Timer	$	15.44
94540	Hub & Pin Assy	$	49.61
94530	L Transfer Arm Assy (Lower Arm)	$	46.31
90520	L Transfer Arm Assy (Upper Arm)	$	46.31
94500	Main Transport, Peri-Pro III	$	1,359.25
60604	O-Ring For Wash Tank	$	4.33
90505	Pin, Top Plate	$	22.05
90543	Plastic Snap Ring	$	5.51
90546	Rubber Bumper - Red	$	5.51
90510	Shutter Plate Assembly	$	117.97
90548	Shutter Release Bar	$	18.74
90512	Shutter Return Spring	$	8.82
30392	Shutter Spring Pin Rear	$	4.20
30391	Spring Pin, Shutter Release Bar	$	7.35
90545	Spring Shutter Release Bar	$	5.51
90590	Track Plate, Top Assembly	$	190.73
94988	Transport Repair Kit	$	173.09
Peri-Pro			
94310	Cover Modification; Drive Motor Cover, Peri-Pro	$	103.64
90213	Cover Plate, dryer, front	$	33.08
90212	Cover Plate, dryer, rear	$	22.05
90750	Daylight Loader Hole Plug Kit	$	30.32
91993	Dryer Drive Gear W/#30389 Set Screw	$	49.61
90223	Dryer Drive Motor Assembly 115v	$	166.48
90610	Dryer Heater Assembly	$	102.53
90400	Dryer Transport	$	171.99
90880	Fan & Motor Assembly, Dryer, 115v	$	156.56
90102	Fan Only For Dryer	$	11.03

Part Number	Description		Price
90555	Film Inlet Grill	$	12.13
90810	Film Receptacle W/3 Dividers, Peri-Pro	$	28.67
90219	Fuse Holder Old Style - Brown Box	$	14.33
90265	Fuse; 5 Amp,115V, (Pkg of 5)	$	17.64
90611	Heater Grill	$	11.03
90997	Main Cover	$	302.09
90995	Main Drive Gear, Peri-Pro, #304 W/#30390 Set Screw	$	29.77
90996	Main Drive Gear, Peri-Pro II, #305	$	34.18
90147	Main Drive Motor Replacement Kit	$	382.12
90500	Main Transport, Peri-Pro & Peri-Pro II	$	1,345.07
90221	Power Switch Kit Serial #14999 & Below (Push Button)	$	49.61
90262	Power Switch, Rocker Style: Serial #15000 & Above	$	39.69
90127	Retaining Ring For Dryer Fan	$	7.72
90111	Side Plate	$	74.42
117327	Socket, Thermal Fuse	$	5.51
90278	Thermal Fuse Assy Kit,(112 C)P	$	22.05
Accessories Peri-Pro I & III			
94640	Access Door; With Filling Label	$	24.26
43972	Brush Only	$	11.03
90117	Developer Tank, Black	$	39.69
90980	Film Carrier, #0, Box of 5	$	64.50
90985	Film Carrier, #1, Box of 5	$	64.50
90990	Film Carrier, #3, Box of 5	$	64.50
90831	Film Carrier, #4, Box of 5	$	64.50
90555	Film Inlet Grill	$	12.13
90810	Film Receptacle W/3 Dividers, Peri-Pro	$	28.67
90118	Fixer Tank, Red	$	39.69
43945	Formula 2000 Plus, Twin Pack	$	71.00
90602	Inlet Cover	$	7.72
94500	Main Transport, Peri Pro III	$	1,359.25
90500	Main Transport, Peri-Pro & Peri-Pro II	$	1,345.07
60604	O-Ring For Wash Tank	$	4.33
43975	Kit; Track Cleaning, Peri-Pro	$	154.00
90121	Service Tray For Peri-Pro & Peri-Pro III	$	55.13
94130	Wash Tank Assy, White w/Drain Port & (60604) O-Ring for PP III	$	49.61
90119	Wash Tank Assy, White, Peri Pro & Peri Pro II	$	43.00
43971	Wash Tub, Tub only	$	71.66
90703	Waste Deposit Box	$	15.44
94125	Water Bottle	$	15.44
94920	Water Bottle w/Spout	$	34.18

Part Number	Description	Price
Daylight Loader For Peri-Pro		
90730	Cuff Assembly, 1 Each	$ 103.64
90735	Cuff Assembly, 1 Pair	$ 200.66
90090	Daylight Loader For Peri Pro	$ 455.00
90750	Daylight Loader Hole Plug Kit	$ 30.32
90713	Felt Gasket	$ 8.82
90714	Handle Duplicator Assy.	$ 11.03
30412	Handle Screw	$ 4.20
90711	Hinge Pin, Left	$ 8.82
90712	Hinge Pin, Right	$ 8.82
90716	Hinge Socket	$ 8.82
90780	View Glass, Red	$ 131.20
Duplicator/Daylight Loader For Peri-Pro		
49161	Bullet Catch With Strike Plate	$ 7.35
92750	Duplicator Door Assy	$ 449.82
92000	Film Duplicator/Daylight Loader	$ 1,025.00
92758	Foam	$ 11.03
90714	Handle Duplicator Assy.	$ 11.03
92002	Hardware Kit For Mounting	$ 26.46
92720	Light Filter Kit	$ 14.33
116574	Magnetic Switch	$ 28.35
92746	P.C. Board & Reflector Assy	$ 409.03
92786	Power Cord, Lugged	$ 48.51
105A	Replacement Bulb	$ 15.00
92755	Tray Base Assy (Of Dup Door Incl Foam Sheet #2 Film Holder Grid)	$ 181.91
Main Transport Peri-Pro® I & III		
90522	Bearing, "U" Transfer Arm	$ 7.72
90546	Bumper, Rubber	$ 5.51
90523	Bushing, "L" Transfer Arm	$ 7.72
90524	Bushing, "U" Transfer Arm	$ 5.51
90550	Gear & Shaft Assy, "U" Transfer Arm, W/#90516 Gear	$ 22.05
90519	Gear Idler, 24 Tooth	$ 7.72
90525	Gear, "L" Transfer Arm, 15 Tooth	$ 7.72
90518	Gear, "U" Transfer Arm, 24 Tooth	$ 8.82
90516	Gear, "U" Transfer Arm, 24 Tooth	$ 7.72
90517	Gear, "U" Transfer Arm, 60 Tooth	$ 11.03
90521	Gear, Timer	$ 15.44
90540	Hub & Pin Assy	$ 49.61
90520	L Transfer Arm, Serial #9520 & Above	$ 46.31
90500	Main Transport, Peri-Pro & Peri-Pro II	$ 1,345.07
90505	Pin, Top Plate	$ 22.05
90543	Plastic Snap Ring	$ 5.51
90510	Shutter Plate Assembly	$ 117.97
90548	Shutter Release Bar	$ 18.74

Part Number	Description		Price
30391	Spring Pin, Shutter Release Bar	$	7.35
90545	Spring Shutter Release Bar	$	5.25
90512	Spring, Shutter Return	$	8.40
90988	Transport Repair Kit	$	158.55
90530	U Transfer Arm Assy, S/N 9520 & Above (See 90572 Sn9519 & Below)	$	49.35

ProVecta® HD Intraoral X-Ray System

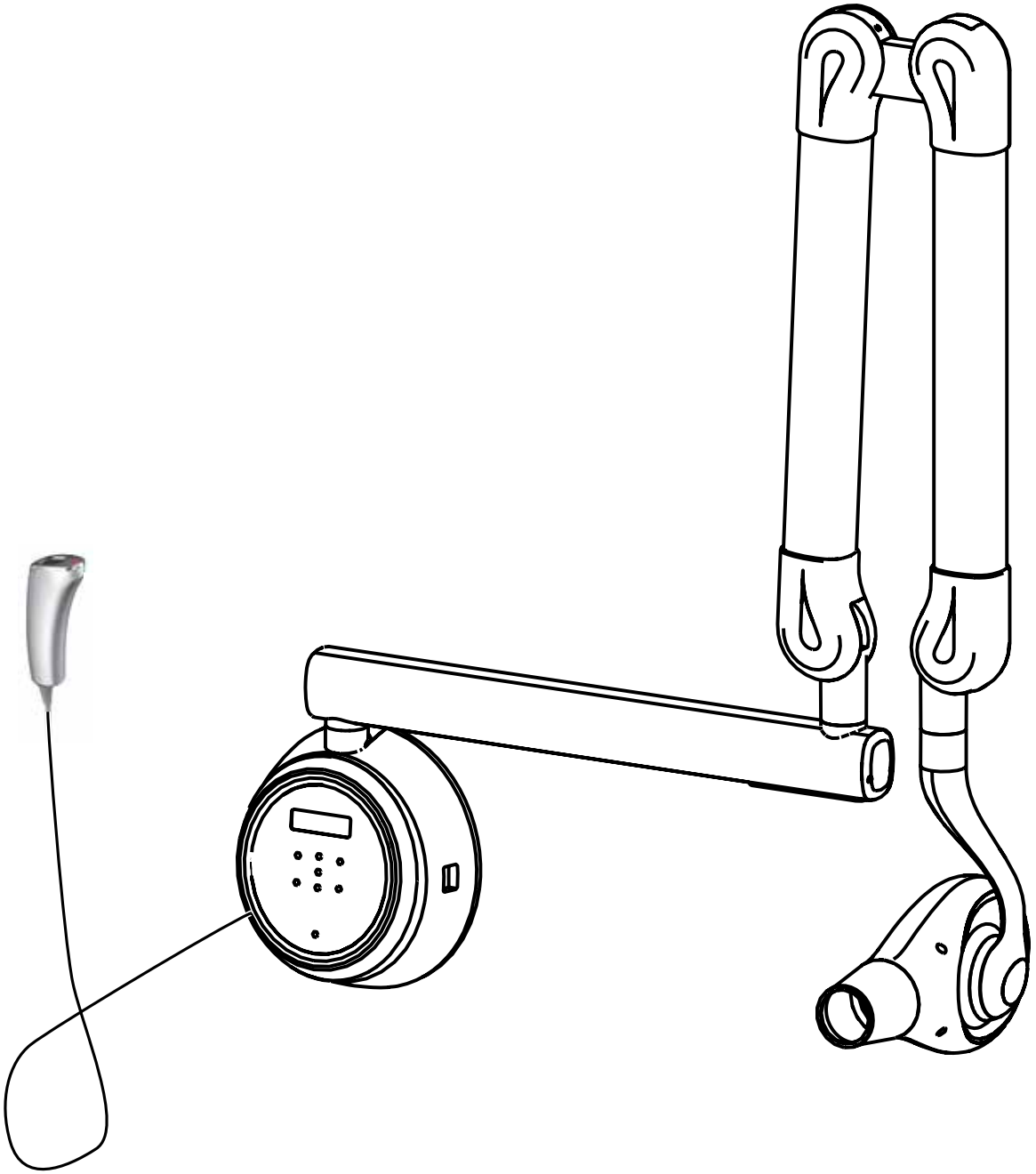

Part Number	Description	Price
ProVecta® HD		
A6400	Control Panel Remote Mounting Kit, ProVecta HD	$ 154.00
A6345	X-ray Collimator, Rectangular 1.2 x 1.6 in2, ProVecta HD	$ 98.00
A6346	X-ray Collimator, Rectangular 0.8 x 1.2 in2, ProVecta HD	$ 98.00
A6369	Horizontal Arm 18 inch Assembly, ProVecta HD	$ 858.00
A6356	Horizontal Arm 24 Inch Assembly, ProVecta HD	$ 858.00
A6357	Horizontal Arm 35 Inch Assembly, ProVecta HD	$ 858.00
A6358	Exposure Switch Assembly, ProVecta HD	$ 174.00
A6359	Exposure Switch Holder, ProVecta HD	$ 20.00
A6361	Generator Head Assembly, ProVecta HD	$ 3,604.00
A6363	Generator Arm Cover Cap, ProVecta HD	$ 16.00
A6364	Generator Case plug Set, ProVecta HD	$ 12.00
A6365	Scissor Arm Assembly, ProVecta HD	$ 3,269.00
A6366	Main Inverter PCB, ProVecta HD	$ 906.00
A6367	Power Switch, ProVecta HD	$ 59.00
A6368	Control Panel Assembly, ProVecta HD	$ 457.00
A6381	Hardware Kit, ProVecta HD	$ 36.00
A6382	Control Panel Cover, ProVecta HD	$ 32.00
A6383	Carton Only, ProVecta HD	$ 78.00
A6384	Packaging Complete, ProVecta HD	$ 262.00
A6395	Extension Cone, ProVecta HD	$ 125.00
A6409	Tube Head Swapping Tool, ProVecta HD	$ 312.00
A6415	Scissor Arm End Caps, ProVecta HD	$ 47.00
A6416	Horizontal Arm End Cap and Cover, ProVecta HD	$ 20.00
A6417	Horizontal Arm Brake Set, ProVecta HD	$ 47.00
A6418	Firmware RS232C Cable, ProVecta HD	$ 60.00
A6419	Tube Head Bracket Snap Key, ProVecta HD	$ 59.00
ProVecta® 70 Intraoral X-Ray		
A2920	16" On Center Mounting Plate Standard, 12 3/4"H X 19"W	$ 332.85
115952	630ma, 250v, Fast-Acting Fuse	$ 4.37
A2930	Bearing Block Replacement Kit	$ 595.35
A2739	Bearing Block Replacement Kit for Mobile	$ 318.62
A2970	Bearing Block Straight Arm Rotational Brake Assy Replacement Kit	$ 90.41
A2705	Brake Kit for Mobile X-ray	$ 102.53
A2345	Cable Assy. Ribbon	$ 60.09
A2985	Circuit Breaker Replacement Kit (Incl. 2 Breakers)	$ 27.56
A2808	End Cap Replacement Kit, Scissor Arm	$ 66.50
A2986	Mounting Hardware & Tools Kit	$ 175.30
A2020	Plastic Cap and Cover Kit, 1 1/8"	$ 31.00
A2975	Power Switch Replacement Kit	$ 33.08
A2991	Remote (Hall Mount) Control X-ray Cover Replacement Kit	$ 115.76
A2993	Scissor Arm Adjustment Hex Wrench 5/16" T-Handle	$ 87.10
A2025	Scissor Arm Cap(S) Replacement Kit Includes Painted Gary Screws	$ 139.00
A2900	Standard Wall Mount Electronics Replacement Kit Control Kit	$ 2,198.39
A2911	Standard X-ray Control Cover Replacement Kit	$ 88.20

Part Number	Description		Price
A2943	Straight Arm Rotation Stop Screw	$	65.00
A2969	Straight Arm Wire Access Cover With Screws Replacement Kit	$	18.74
A2550	Switch Mount Assy; Exposure Switch, Remote Control	$	269.01
A2905	Tubehead Retaining C-Clip & Grounding Clip Replacement Kit	$	124.58
A2254	X-ray Tubehead Nose Cone Ring	$	103.64
A2250	X-ray Tubehead Replacement Kit	$	3,070.85
A2990	X-ray Tubehead Simulator	$	43.00
ProVecta® S-Pan			
A7306	Temple Support Adjustment Assembly, ProVecta S-Pan	$	72.00
A7318	Remote Exposure Switch Adapter, ProVecta S-Pan	$	45.00
A7327	Packing-set ProVecta S-Pan	$	864.00
A7330	Ball Phantom, ProVecta S-Pan	$	1,170.00
A7331	Exposure Switch, ProVecta S-Pan	$	240.00
A7332	Exposure Switch Holder, ProVecta S-Pan	$	21.00
A7333	LCD Top Cover and Membrane, ProVecta S-Pan	$	111.00
A7334	Temple Support Knob Cover, ProVecta S-Pan	$	18.00
A7335	Spring Torsion Set, ProVecta S-Pan	$	6.00
A7336	Temple Support Mount, ProVecta S-Pan	$	18.00
A7337	Temple Support Spring, ProVecta S-Pan	$	6.50
A7338	Canine Laser Assembly, ProVecta S-Pan	$	258.00
A7339	PCB Assy, Crong Board, ProVecta S-Pan	$	2,124.00
A7341	PCB Assy, MCU Board, ProVecta S-Pan	$	1,164.00
A7342	PCB Assy, Power Board, ProVecta S-Pan	$	1,140.00
A7343	Collimator Photo Sensor, ProVecta S-Pan	$	48.00
A7344	Frankfort Photo sensor, ProVecta S-Pan	$	48.00
A7345	Temple supports (1 pair), ProVecta S-Pan	$	72.50
A7346	Photo Electric Sensor with Harness, ProVecta S-Pan	$	72.00
A7347	Silicone Cap-set, ProVecta S-Pan	$	12.00
A7348	Column Top Cover, Moving Section, ProVecta S-Pan	$	102.00
A7349	Chin Support Cover, ProVecta S-Pan	$	33.00
A7351	Provecta S-Pan X-Ray Generator, G0000031	$	7,215.00
A7352	Chin Support Platform, ProVecta S-Pan	$	87.00
A7353	Case Top Cover, ProVecta S-Pan	$	204.00
A7354	Column Bottom Cover, Moving Section, ATI Branded	$	114.00
A7355	Floor Stand for Provecta S-Pan	$	2,000.00
A7356	Canine Laser Knob Cover, ProVecta S-Pan	$	33.00
A7357	Base Stand Cover, ProVecta S-Pan	$	216.00
A7358	Top Bracket Wall 2, ProVecta S-Pan	$	75.00
A7359	Top Bracket Wall 1, ProVecta S-Pan	$	135.00
A7360	Frankfort Laser Beam Assembly, ProVecta S-Pan	$	114.00
A7361	Crong Board HDMI Cable Harness, ProVecta S-Pan	$	177.00
A7362	Crong Board USB Cable Harness, ProVecta S-Pan	$	75.00
A7363	2G Micro SD Card, ProVecta S-Pan	$	51.00

Part Number	Description		Price
A7364	Sensor Case (BI), ProVecta S-Pan	$	102.00
A7366	Test body holder, ProVecta S-Pan	$	294.00
A7372	Head Support with cushion, ProVecta S-Pan	$	65.00
A7375	Holder for bite block, ProVecta S-Pan	$	44.00
A7376	Bite block (3 pieces), ProVecta S-Pan	$	50.00
A7385	Laser Test Tool, ProVecta S-Pan	$	195.00
A7390	Chin support for edentulous jaws, ProVecta S-Pan	$	50.00
A7391	Chin support for mandibular joint image, ProVecta S-Pan	$	40.00
A7392	Chin support for sinus image, ProVecta S-Pan	$	40.00
A7396	Hygienic protective silicone for temple support (3 pairs), ProVecta S-Pan	$	44.00
S-Pan Ceph Parts			
A7510	Kit; Covers, Ear Cushions and Nose Support	$	325.00
A7511	Carpus Plate	$	540.00
A7513	Support; Nose, Ceph	$	140.00
A7514	Cover Assembly; Ceph Ear Cushion	$	40.00
A7517	Cover; Ceph Bottom with Sensor Sticker	$	111.00
A7518	Cover; Ceph Bottom Right	$	96.00
A7519	Cover Assembly; Ceph Top Case	$	201.00
A7520	Cover Assembly; Ceph Bottom Case	$	147.00
A7521	Ceph HS / Master; XMARU2301CF-HS	$	15,990.00
A7522	Frame; White DS Ceph Top	$	129.00
A7523	Frame; White Ceph Top	$	165.00
A7524	Motor; Stepper	$	342.00
A7525	Harness Assembly; 2nd Collimator	$	95.00
A7526	Harness Assembly; Ceph Sensor	$	95.00
A7527	Kit; Timing Belts, Ceph	$	60.00
A7528	Cover; White, Rack Gear	$	39.00
A7529	Harness Assembly; Ceph Sensor with Cable Track	$	117.00
A7530	Harness; LVDS Sensor	$	255.00
A7531	Harness; Ceph Parts	$	78.00
A7532	Assembly; Ceph Arm	$	2,307.00
A7533	Motor; Tilt	$	130.00
A7534	Motor; Stepper	$	100.00
A7535	Circuit Board Assembly; Tube Tilt	$	230.00
A7536	Circuit Board Assembly; Tube Tilt	$	3,120.00
A7537	Kit; Switch, Micro	$	65.00
A7538	Cover; White, Ceph, Vertical Upper	$	204.00
A7539	Kit; Ceph, Packaging, Box	$	1,170.00

Part Number	Description	Price
A/T ScanX® 2, ScanX Intraoral 2 and ScanX Duo 2		
F3940	Arch Cover Replacement	$ 502.74
B7434	Transport Belt Drive Assy Kit, ScanX ILE, Set of 4	$ 2,197.82
B7950	ILE PCB Assy Replacement	$ 265.65
73096	Line Cord Replacement	$ 43.00
F3910	Main PCB Assy Replacement	$ 2,395.73
B7095	Power Supply, ScanX ILE (100w)	$ 261.29
B7495	Power Supply Replacement: Medical Grade for Export Models	$ 732.06
B7625	Ring Assy. 20 LED PCB/Roller Holder	$ 621.05
74588	PCB, Start of Line, Replacement Kit	$ 175.30
F3930	Stepper Motor PCB Assy Replacement	$ 256.62
F3745	Transport Arch Assy Replacement: Grey Belt	$ 5,540.06
B7920	Transport Belt Maintenance Kit, ScanX, Set of 4	$ 347.31
F3523	Tray Liner	$ 35.70
B3554	USB Cable 6 ft.	$ 22.05
F3920	User Interface Status PCB Assy Replacement	$ 966.42
A/T ScanX, ScanX Intraoral and ScanX Duo		
B7431	1 Belt Drive Assy, ScanX Ile Kit	$ 426.67
B7454	Axle Assembly; Exit Rollers, In-Line Eraser	$ 71.66
73554	Cable, EPP, Packaged	$ 102.53
B3554	USB Cable 6 ft.	$ 22.05
B2010	Cleaning sheets for ScanX (12 Pack)	$ 177.00
B2020	Cleaning sheets for ScanX (25 Pack)	$ 299.00
B3010	Cleaning sheets for ScanX I/O (12 Pack)	$ 142.00
B3020	Cleaning sheets for ScanX I/O (25 Pack)	$ 247.00
D1010	Cleaning sheets for ScanX Duo (12 Pack)	$ 80.00
D1020	Cleaning sheets for ScanX Duo (25 Pack)	$ 152.00
B9312	Duo Power Supply, 24 VDC	$ 385.88
116512	Duo Power Switch	$ 8.00
115159	Duo Circuit Breakers	$ 13.65
73096	Line Cord Replacement	$ 43.00
D1300	Dust Cover – Duo	$ 105.00
74050	Dust Cover Kit	$ 105.00
B7264	Main Assy PCB, Replacement Kit, ScanX ILE	$ 2,281.65
B7464	Main Assy PCB, Replacement Kit, ScanX I/O ILE	$ 2,294.47
73596-10	EPP Communication Cable, 10 ft.	$ 84.00
73578-57	Extraoral Phosphor Plate (PSP); TMJ Size 5" x 7"	$ 739.00
73578-6	Extraoral Phosphor Plate (PSP); Panoramic Size 6" x 12" (15 cm x 30 cm)	$ 1,262.00
73578-5	Extraoral Phosphor Plate (PSP); Panoramic Size 5" x 12"	$ 1,228.00
73578-8	Extraoral Phosphor Plate (PSP); Cephalometric Size 8" x 10"	$ 1,325.00
B7910	Fiber Op to Ribbon Kit	$ 611.10
73431	Holder, Inner LED	$ 4.20
73432	Holder, Outer LED	$ 4.20
D1207	Ile Control Board Assy; ScanX Duo	$ 220.50
73566-0	Intraoral Phosphor Plate (PSP) Guide; Size 0	$ 42.00

Part Number	Description	Price
73566-1	Intraoral Phosphor Plate (PSP) Guide; Size 1	$ 42.00
73566-2	Intraoral Phosphor Plate (PSP) Guide; Size 2	$ 42.00
73566-3	Intraoral Phosphor Plate (PSP) Guide; Size 3	$ 42.00
73566-4	Intraoral Phosphor Plate (PSP) Guide; Size 4	$ 42.00
73445-0	Intraoral Phosphor Plate (PSP); Size 0 (2 Pack)	$ 89.00
73445-1	Intraoral Phosphor Plate (PSP); Size 1 (2 Pack)	$ 89.00
73445-2	Intraoral Phosphor Plate (PSP); Size 2 (4 Pack)	$ 175.00
73445-3	Intraoral Phosphor Plate (PSP); Size 3 (2 Pack)	$ 108.00
73445-4	Intraoral Phosphor Plate (PSP); Size 4	$ 132.00
73470	Intraoral Phosphor Plate Transfer Box	$ 42.00
74631	Kit; Replacement, 1 Belt Drive AS	$ 528.29
74167	Light Seal Foam	$ 1.62
D1146	Light Seal Kit, Inlet, ScanX Duo	$ 215.25
74610	Light Seal Kit, Inlet, ScanX ILE	$ 214.20
D1356	Light Seal Kit, Outlet, ScanX Duo	$ 50.40
73096	Line Cord Replacement	$ 43.00
73767	Lower Cover Assy	$ 159.86
74364	Main Assy PCB, Replacement Kit, ScanX Classic	$ 2,039.63
B3464	Main Assy PCB, Replacement Kit, ScanX I/O	$ 2,181.85
B7264	Main Assy PCB, Replacement Kit, ScanX ILE	$ 2,281.65
B7464	Main Assy PCB, Replacement Kit, ScanX I/O ILE	$ 2, 294.47
D1364	Main Assy PCB, Replacement Kit, ScanX Duo	$ 1,988.91
73390	Outlet Light Seal Kit	$ 122.38
73248-0	Patented, Easy-Open Barrier Envelopes; Size 0 (100 Pack)	$ 24.00
73248-1	Patented, Easy–Open Barrier Envelopes; Size 1 (100 Pack)	$ 24.00
73248-2	Patented, Easy–Open Barrier Envelopes; Size 2 (300 Pack)	$ 59.00
73248-3	Patented, Easy–Open Barrier Envelopes; Size 3 (100 Pack)	$ 31.00
73248-4	Patented, Easy–Open Barrier Envelopes; Size 4 (50 Pack)	$ 31.00
B7176	PCB, 20-24 LED Control, ScanX ILE Eraser Board	$ 251.37
74588	PCB, Start of Line, Replacement Kit	$ 175.30
74365	PCB, Stepper Motor, Replacement Kit	$ 280.04
B8910	Phosphor Plate (PSP) Cleaning Wipes (Box of 50)	$ 80.00
B8900	Phosphor Plate (PSP) Cleaning Wipes (10 Boxes of 50 count each)	$ 625.00
B7095	Power Supply, ScanX ILE (100w)	$ 261.29
D1158	Ring Assy; 10 LED, Outlet, ScanX Duo	$ 314.21
B7625	Ring Assy; 20 LED PCB/Roller Holder (ScanX 12-AP)	$ 621.05
B7271	Rollers (Inlet)	$ 46.31
B7272	Rollers (Outlet)	$ 46.20
D1150	Transport Arch, ScanX Duo	$ 3,103.76
73050	Transport Arch Replacement Kit, ScanX Non-ILE	$ 5,363.40
B7760	Transport Arch Replacement Kit, ScanX ILE	$ 5,427.45
D1920	Transport Belt Maintenance Kit, ScanX Duo, Set of 2	$ 165.38
B7920	Transport Belt Maintenance Kit, ScanX, Set of 4	$ 347.31
D1932	Transport Belt Drive Assy Kit, ScanX Duo, Set of 2	$ 978.29
B7434	Transport Belt Drive Assy Kit, ScanX ILE, Set of 4	$ 2,197.82

Part Number	Description		Price
74634	Transport Belt Drive Assy Kit, ScanX Non-ILE, Set of 4	$	1,696.87
D1115	Upper Arch Cover Replacement Kit ScanX Duo	$	210.58
B7995	Upper Arch Cover Replacement Kit, ScanX ILE	$	385.88
74362	Upper Arch Cover Replacement Kit, ScanX Non-ILE	$	490.61
A/T ScanX® Swift (G8000) Accessories			
G8030	Scanx Swift Cleaning Sheet, Pack of 12	$	32.00
G8035	Scanx Swift Cleaning Sheet, Pack of 25	$	60.00
G8150	Dust Cover	$	26.25
G8050	Front Cover Assembly	$	763.31
G8045	Inlet Brush Assembly	$	32.76
G8140	Inlet Guide — Size 0	$	35.00
G8145	Inlet Guide — Size 2	$	35.00
G8135	Outlet Pad	$	27.30
G8075	PCB - Eraser	$	217.31
G8115	Power Supply	$	80.00
G8125	Power USB Cover	$	38.22
G8060	Rear Cover Assembly	$	162.71
G8055	Roller Assembly	$	300.30
G8065	Transport Belt	$	135.45
G8085	Transport Drive Assembly	$	654.11
B5027	USB Cable 15 ft.	$	63.00
B3554	USB Cable 6 ft.	$	22.05

Part Number	Description	Price
A/T ScanX® Accessories		
G8040	2-Year Service & Overhaul Kit: Inlet Brush; Roller Assy; Transp Belt; 2 & 2.5 Wrench; Cleaning Sheet; Docs	$ 275.63
G8070	4-Year Service & Overhaul Kit: Inlet Brush; Roller Assy; Transp Belt; 2 & 2.5 Wrench; Cleaning Sheet; Docs	$ 500.00
73248-0	Patented, Easy-Open Barrier Envelopes; Size 0 (100 Pack)	$ 24.00
73248-1	Patented, Easy-Open Barrier Envelopes; Size 1 (100 Pack)	$ 24.00
73248-2	Patented, Easy-Open Barrier Envelopes; Size 2 (300 Pack)	$ 59.00
G8195	Barrier Film; Roll of 900, Scanx Swift	$ 45.00
B8910	Phosphor Plate (PSP) Cleaning Wipes (Box of 50)	$ 80.00
73445-0	Intraoral Phosphor Plate (PSP); Size 0 (2 Pack)	$ 89.00
73445-1	Intraoral Phosphor Plate (PSP); Size 1 (2 Pack)	$ 89.00
73445-2	Intraoral Phosphor Plate (PSP); Size 2 (4 Pack)	$ 175.00
G8030	Scanx Swift Cleaning Sheet, Pack of 12	$ 32.00
G8035	Scanx Swift Cleaning Sheet, Pack of 25	$ 60.00
73470	Intraoral Phosphor Plate Transfer Box	$ 42.00
A/T ScanX Eraser		
74079	Bulb Replacement Kit 24 Watt/Ea.	$ 112.46
74080	Circuit Breaker Replacement Kit	$ 30.87
73403-2	Magnetic Sensor Assy	$ 65.05
74081	PC Board Replacement Kit For Model 73800	$ 250.27

ScanX Hot Swap Program Summary
Effective February 6, 2017

1. Effective as of February 6, 2017 through December 31, 2017.
2. Age of unit and referenced date below go by Date of Manufacture printed on the serial plate.
3. ScanX warranty period under program:
   Refurbished: 6 months OR remainder of original warranty, whichever is greater.
4. Dealer to contact Air Techniques for RMA on the original ScanX.
5. Dealer to provide Air Techniques with a copy of the original dealer's invoice to the dentist for proof of purchase.
6. Dealer will be invoiced at full price as an advance replacement, upon receipt of the original unit by Air Techniques in New York, dealer will be credited accordingly.
7. Dealer will be responsible for freight both ways.
8. Replacement unit must be delivered to and received by the same dental practice, (with addresses matching the original dealer's invoice to the dentist) for the return of the original ScanX under RMA.
9. Air Techniques reserves the right to check and verify all returned orders.

— Please see schedule below for pricing —

Hot Swap	B7100 Hot Swap 2012 or Older — Replaced with F3600R	$	7,295.00
Hot Swap	B7100 Hot Swap 2013 or Newer — Replaced with F3600R	$	4,795.00
Hot Swap	B7200 Hot Swap 2012 or Older — Replaced with F3700R	$	7,295.00
Hot Swap	B7200 Hot Swap 2013 or Newer — Replaced with F3700R	$	5,295.00
Hot Swap	D1000 Hot Swap — Replace with D1000R	$	4,295.00
Hot Swap	D1000F Hot Swap — Replace with D1000R	$	4,295.00
Hot Swap	F3600 Hot Swap — Replace with F3600R	$	4,795.00
Hot Swap	F3700 Hot Swap — Replace with F3700R	$	5,295.00

ScanX Upgrade Loyalty Program Summary
Effective February 6, 2017

1. Effective as of February 6, 2017 through December 31, 2017.
2. ScanX warranty period under program: 24 months
3. Dealer to contact Air Techniques for RMA on the original ScanX.
4. Dealer to provide Air Techniques with a copy of the original dealer's invoice to the dentist for proof of purchase.
5. Dealer will be invoiced at full price as an advance replacement, upon receipt of the original unit by Air Techniques in New York, dealer will be credited accordingly.
6. Dealer will be responsible for freight both ways.
7. Upgrade unit must be delivered to and received by the same dental practice, (with addresses matching the original dealer's invoice to the dentist) for the return of the original ScanX under RMA.
8. Air Techniques reserves the right to check and verify all returned orders.

— Please see schedule below for pricing —

73400 Upgrade	Non-ILE ScanX Classic Upgrade to **New F3700U**	$	14,495.00
B3100 Upgrade	Non-ILE ScanX I/O Upgrade to **New F3600U**	$	9,995.00
B7200 Upgrade	ScanX® Classic ILE Upgrade to **New F3700U**	$	14,495.00
D1000 Upgrade	ScanX Duo Upgrade to New **D1000FU**	$	7,995.00
B7100 Upgrade	ScanX I/O Upgrade to New **F3600U**	$	9,995.00

Digital Imaging

Part Number	Description	Price
CamX® Triton HD		
J2560	CamX Triton HD, USB HUB	$ 450.00
J2530	CamX Triton HD Camera Sheath (500)	$ 375.00
J2525	CamX Triton HD Camera Sheath (100)	$ 80.00
J2721	CamX Triton HD Distance Spacer (25)	$ 164.00
J2550	CamX Triton HD Storage Box for Heads	$ 40.00
J2540	CamX Triton HD Wall Mount	$ 53.00
J2570	CamX Triton HD Rubber Ring (2)	$ 10.25
J2050	Air Techniques Lens Cleaning Cloth	$ 4.50
J2021	CamX USB Cable Holder	$ 9.34
CamX Elara & CamX Spectra		
J2321	CamX Spectra Distance Spacer (25)	$ 164.00
J2030	CamX Elara/Spectra Camera Sheath (500)	$ 375.00
J2025	CamX Elara/Spectra Camera Sheath (100)	$ 80.00
J2040	CamX Elara/CamX Spectra Wall Mount	$ 53.00
J2020	CamX Elara/CamX Spectra USB Cable 8 ft	$ 104.00
J2800	CamX Elara/Spectra Intraoral Imaging Combo	$ 6,400.00
J2061	CamX Elara/Spectra USB Cable Extender	$ 36.00
CamX® Luna HD Camera System		
G1000	CamX Luna HD Camera System	$ 5,995.00
G1151	CamX Luna HD - USB Handpiece Cable, 10 ft.	$ 104.00
G1072	Sheaths for CamX Luna HD (100 Pack)	$ 97.00
G1073	Sheaths for CamX Luna HD (500 Pack)	$ 388.00
D7365	Visix Pro Imaging Software for CamX Luna HD	$ 849.00
G4011	Wall Mount for CamX Luna HD	$ 108.00
CamX Polaris Intraoral Camera System		
D7014	Blue Connection Grip	$ 5.51
G1151	CamX Polaris - 10 ft. USB cable	$ 104.00
G5010	CamX Polaris Hand Piece Only	$ 3,520.00
D7170	CamX Polaris Holder with Chairside Adapter	$ 97.65
D7120	CamX Polaris Sheaths - Box of 500	$ 425.25
D7125	CamX Polaris Sheaths - Box of 100	$ 107.10
D7540-9	CamX Polaris Universal Umbilical (9')	$ 359.00
D7540-15	CamX Polaris Universal Umbilical (15')	$ 399.00
D7540-30	CamX Polaris Universal Umbilical (30')	$ 530.00
D7540-50	CamX Polaris Universal Umbilical (50')	$ 699.00
D7040	CamX Polaris USB Umbilical (10')	$ 119.70
G5111	Sheaths for Polaris and Spectra (100 Pack)	$ 97.00
G5110	Sheaths for Polaris and Spectra (500 Pack)	$ 388.00
D7365	Visix Imaging Software for Polaris Only	$ 849.00
G4011	Wall Mount for Polaris and Spectra	$ 108.00

Part Number	Description		Price
Acclaim Portable Intraoral Camera			
A5115	Cable Assy, 10ft., Footswitch To Gameport	$	266.81
77379	Cable, S-Video, 6ft. (For Acclaim With Capture Card)	$	51.82
B3554	USB Cable 6 ft.	$	22.05
A5110	Infection Control Sheaths (Box Of 100)	$	72.50
A5100	Infection Control Sheaths (Box Of 500)	$	230.00
CamX® Spectra Caries Detection Aid (G-Series)			
G4650	CamX Spectra - 10 ft. USB Cable	$	104.00
G4640	CamX Spectra - 10 mm Distance Spacers (25 Pack)	$	164.00
G4010	CamX Spectra Hand Piece Only	$	3,770.00
D4065	CamX Visix Imaging Software for Spectra Only	$	849.00
G4011	CamX Wall Mount for Spectra and Polaris	$	108.00
G5111	Sheaths for Spectra and Polaris (100 Pack)	$	97.00
G5110	Sheaths for Spectra and Polaris (500 Pack)	$	388.00
D4170	CamX Spectra Holder with Chairside Adapter	$	97.65
D4125	CamX Spectra Sheaths (Box Of 100)	$	109.20
D4120	CamX Spectra Sheaths (Box Of 500)	$	422.10
D4140	CamX Spectra Spacers -10mm (Box Of 25)	$	178.50
D4020	CamX Spectra Umbilical (10')	$	119.70
A/T SLC			
77186	Infection Control Sheaths For Handpiece (Box Of 100)	$	79.00
77100	Infection Control Sheaths For Handpiece (Box Of 500)	$	275.00
A3112	Replacement Lamp, 100w, 12v	$	61.74
B3554	USB Cable 6 ft.	$	22.05
Vistacam Omni & Omni Ic4			
77243	Line cord; 10ft, 18 ga., IEC x Hospital Grade 250V	$	44.10
77186	Infection Control Sheaths For Handpiece (Box Of 100)	$	79.00
7100	Infection Control Sheaths For Handpiece (Box Of 500)	$	275.00

Exchange Parts

Part #	Description	Outright Sale Price	Exchange Sale Price
AirStar® Replacement Heads			
85890	Compressor Head Assembly for AirStar 10	$ 3,435.00	$ 3,025.00
85940	Compressor Head Assembly for AirStar 12/30/40	$ 3,435.00	$ 3,025.00
85960	Compressor Head Assembly for AirStar 21	$ 4,425.00	$ 3,895.00
85910	Compressor Head Assembly for AirStar 22/40/50/70	$ 4,425.00	$ 3,895.00
85880	Compressor Head Assembly for AirStar 100	$ 7,825.00	N/A
AirStar NEO Replacement Heads			
87695	Compressor Head Assembly for AirStar 10 NEO	$ 3,435.00	N/A
87697	Compressor Head Assembly for AirStar 21 NEO	$ 4,425.00	N/A
87698	Compressor Head Assembly for AirStar 22/40/50/70 NEO	$ 4,425.00	N/A
87696	Compressor Head Assembly for AirStar 30/40 NEO	$ 3,435.00	N/A
Mojave® Replacement Pumps			
H5213	V3 Replacement Pump Only	$ 7,895.00	$ 5,925.00
H5215	V5 Replacement Pump Only	$ 9,995.00	$ 6,285.00
H5617	V7 Replacement Pump Only	$ 12,695.00	$ 9,525.00
H5491	V15 Replacement Pump Only	$ 20,695.00	$ 15,525.00
STS Replacement Pumps			
54650	STS-3 Replacement Pump and Capacitor **If system is 5 years old or older, no core exchange is available**	$ 6,235.00	$ 5,615.00
54161	STS-5 Replacement Pump and Capacitor **If system is 5 years old or older, no core exchange is available**	$ 9,975.00	$ 8,975.00
54648	STS-15 Replacement Pump Only **If system is 5 years old or older, no core exchange is available**	$ 24,735.00	$ 22,265.00
VacStar® Replacement Pumps			
55110	Replacement Pump for VS20, VS2, or VS5 1HP, Bronze Base	$ 2,555.00	$ 2,295.00
55111	Replacement Pump for VS40, VS4, or VS8 2HP, Bronze Base	$ 3,195.00	$ 2,875.00
56178	Replacement Pump for VS50/50H, 1HP, Bronze Base	$ 2,795.00	$ 2,515.00
56179	Replacement Pump for VS80/80H, 2HP, Bronze Base	$ 2,935.00	$ 2,645.00
VacStar NEO Replacement Pumps			
K1120	Replacement Pump for VS20 NEO	$ 4,295.00	N/A
K1140	Replacement Pump for VS40 NEO	$ 4,575.00	N/A
K1150	Replacement Pump for VS50 NEO	$ 3,695.00	N/A
K1180	Replacement Pump for VS80 NEO	$ 3,995.00	N/A

Part #	Description	Outright Sale Price	Exchange Sale Price
A/T 2000®, A/T 2000 Plus, A/T 2000 XR			
43500	Developer Rack for A/T 2000 and A/T 2000 PLUS	$ 1,135.80	$ 930.22
45500	Developer Rack for A/T 2000 XR	$ 1,135.80	$ 930.22
44415	Electronics Assembly for A/T 2000 PLUS	$ 3,596.31	$ 2,945.38
45415	Electronics Assembly for A/T 2000 XR	$ 3,596.31	$ 2,945.38
43505	Fixer Rack for A/T 2000 and A/T 2000 PLUS	$ 1,102.06	$ 902.59
45505	Fixer Rack for A/T 2000 XR	$ 1,102.06	$ 902.59
43510	Wash/Dry Rack for A/T 2000 and A/T 2000 PLUS	$ 2,056.80	$ 1,684.53
45510	Wash/Dry Rack for A/T 2000 XR	$ 2,056.80	$ 1,684.53
ScanX®			
73050	Transport Arch Assembly	$ 5,363.40	N/A
B7760	Transport Arch Assembly; ScanX ILE units	$ 5,427.45	N/A
D1150	Transport Assembly; ScanX Duo **If unit is 4 years old or older, no core exchange is available**	$ 3,103.70	$ 1,922.55

AIR TECHNIQUES SALES TEAM

NATIONAL SALES MANAGERS

EASTERN US

John Mancus
Cell: 570.357.3902
jmancus@airtechniques.com

WESTERN US

Mike Murphy
Cell: 951.526.9422
mmurphy@airtechniques.com

CANADA

Greg Mellos
Cell: 514.415.4734
gmellos@airtechniques.com

REGIONAL SALES SPECIALISTS

NORTH CENTRAL

Thomas Brice
Cell: 319.430.4066
tbrice@airtechniques.com

MID-ATLANTIC

Keith Urlich
Cell: 516.286.1859
kurlich@airtechniques.com

SOUTHEAST

John Kuzman
Cell: 919.302.0795
jkuzman@airtechniques.com

EAST

Brian Mergentime
Work: 732.221.6971
bmergentime@airtechniques.com

NORTHWEST

James Day
Cell: 203.249.2630
jday@airtechniques.com

NORTHERN CA

Teague Paratore
Cell: 415.483.2483
tparatore@airtechniques.com

SOUTHERN CA

Israel Shalomoff
Cell: 626.818.7318
ishalomoff@airtechniques.com

NORTH TEXAS

Robb Taylor
Cell: 972.998.2913
rtaylor@airtechniques.com

SOUTHWEST

Scott Connolly
Cell: 303.249.6363
sconnolly@airtechniques.com

SOUTH CENTRAL

Holly Martin
Cell: 321.505.3481
hmartin@airtechniques.com

WESTERN CANADA

Victor Yoon
Cell: 778.688.8429
vyoon@profsales.com

WESTERN CANADA

Scott Rumble
Cell: 403.801.5390
srumble@profsales.com

NORTH STAR

Steve Carlin
Cell: 952.491.1223
scarlin@profsales.com

NORTHERN CA

Rick Orme
Cell: 916.837.3839
rorme@profsales.com

NORTHWEST

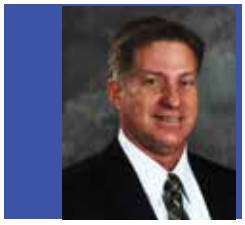

John Miller
Cell: 503.758.9895
jmiller@profsales.com

SOUTHERN CA

Jim Schlosser
Cell: 909.215.3277
jschlosser@profsales.com

HUSKER

Pat Moylan
Cell: 816.729.2900
pmoylan@profsales.com

GREAT BASIN

Sam Paola
Cell: 310.569.1178
spaola@profsales.com

NORTHERN TX

Paul Myers
Cell: 214.704.5100
pmyers@profsales.com

SOUTHWEST

Skip Ellender
Cell: 617.894.1224
sellender@profsales.com

SOUTHERN TX

Michael Park
Cell: 281.702.3992
mpark@profsales.com

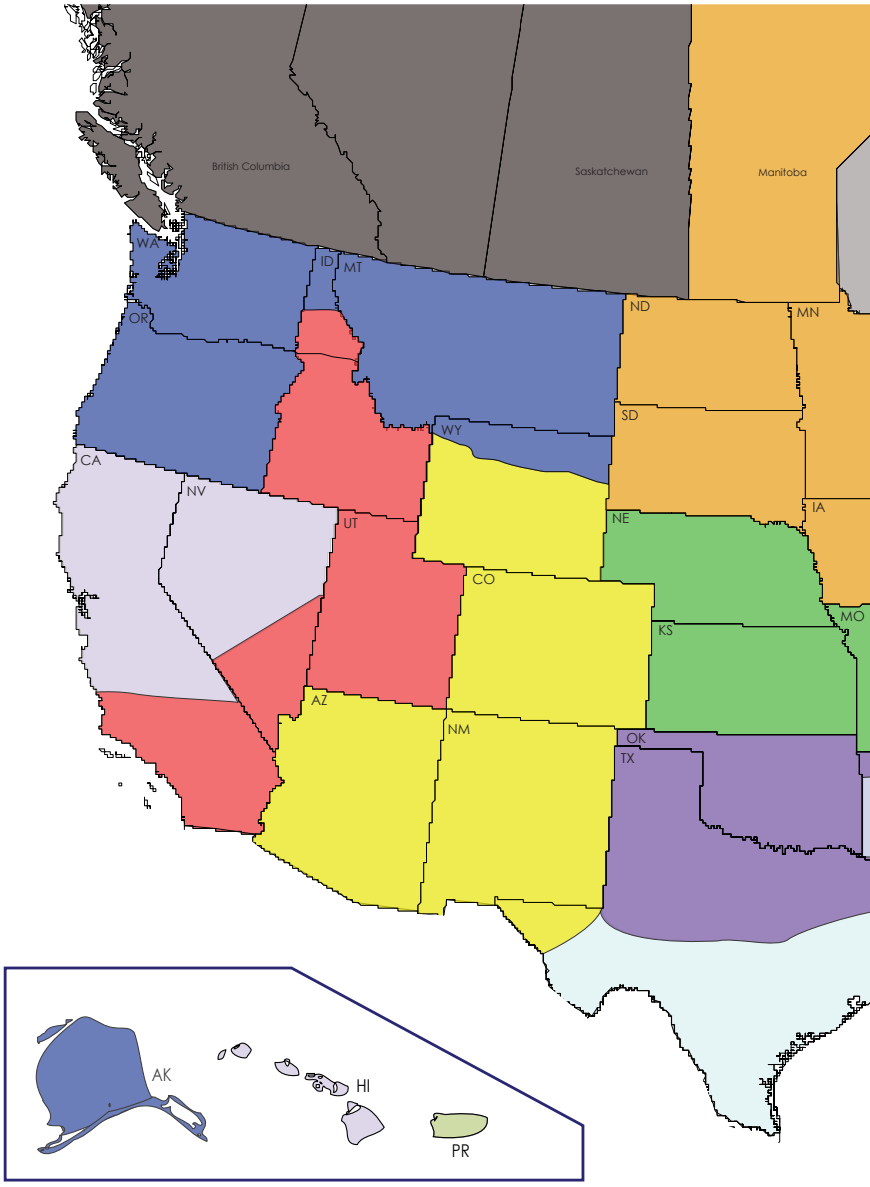

PROFESSIONAL SALES ASSOCIATES

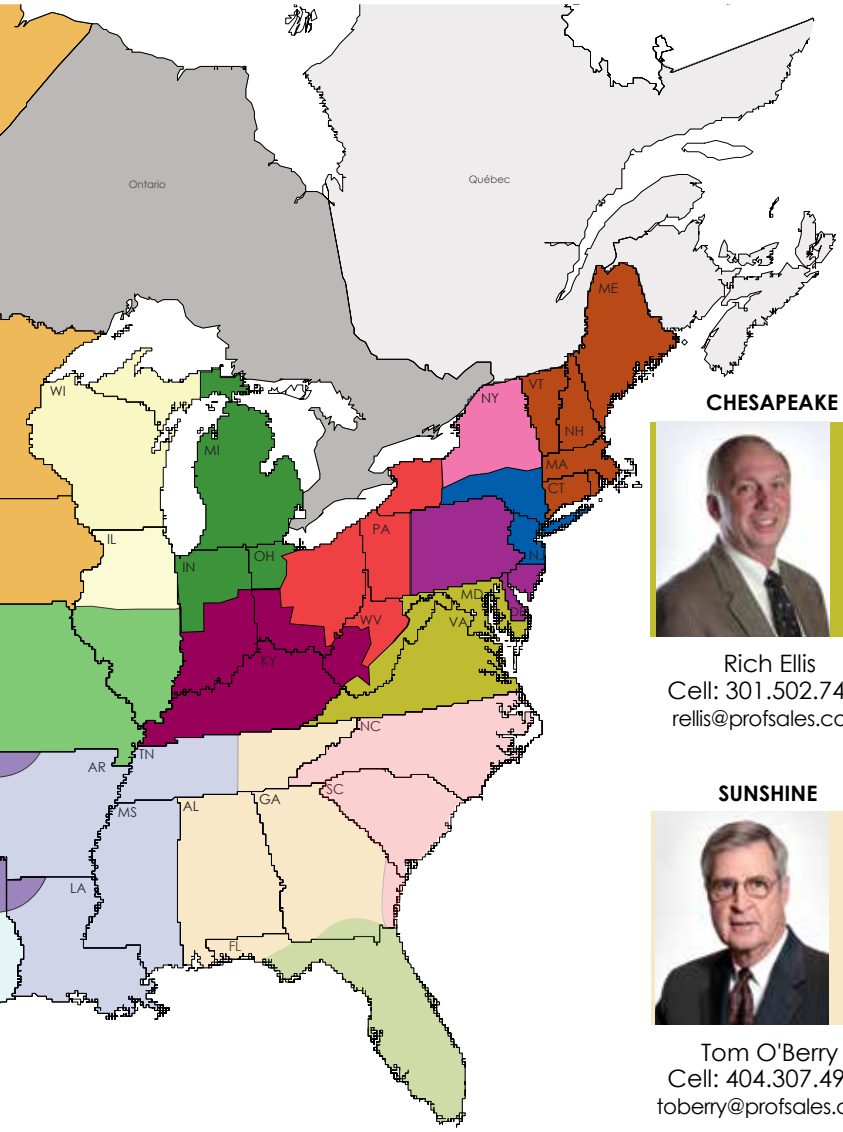

CHICAGO

Bill Reinhardt
Cell: 847.840.3330
breinhardt@profsales.com

BUCKEYE

Milton Lorring
Cell: 216.396.2341
mlorring@profsales.com

ONTARIO

Aaron Renner
Cell: 519.319.7457
arenner@profsales.com

QUEBEC

Michel Cabanie
Cell: 514.793.3368
mcabanie@profsales.com

NEW ENGLAND

Jim Domitrz
Cell: 617.921.4580
jdomitrz@profsales.com

EASTERN PA

Don Rogers, III
Cell: 717.201.7332
drogers@profsales.com

CHESAPEAKE

Rich Ellis
Cell: 301.502.7424
rellis@profsales.com

METRO

Matt Langdon
Cell: 516.316.5913
mlangdon@profsales.com

UPSTATE NY

Milt Baisley
Cell: 203.645.7431
mbaisley@profsales.com

SUNSHINE

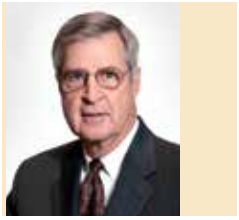

Tom O'Berry
Cell: 404.307.4931
toberry@profsales.com

BLUE RIDGE

Charlie Clarke
Cell: 859.509.6298
cclarke@profsales.com

GREAT LAKES

Bill Highland
Cell: 810.623.7297
bhighland@profsales.com

DIXIE

Matt Highland
Cell: 901.606.3633
mhighland@profsales.com

CAROLINAS

Keith O'Berry
Cell: 336.210.1429
koberry@profsales.com

FLORIDA

Robert Rodriguez
Cell: 305.458.6538
rrodriguez@profsales.com

For over 50 years, **Air Techniques** has been a leading innovator and manufacturer of dental products. Our priority is ensuring complete satisfaction by manufacturing reliable products and providing excellent customer and technical support. Whether the need is digital imaging, utility room equipment or merchandise, Air Techniques can provide the solution via our network of authorized professional dealers. Proudly designed, tested and manufactured in the United States. Our products are helping dental professionals take their practices to the next level.

Air Techniques' products are distributed through authorized dealers only.

Corporate Headquarters
1295 Walt Whitman Road | Melville, NY 11747-3062 | Phone 800.247.8324 | Fax 888.247.8481

Western Facility
291 Bonnie Lane, Suite 101 | Corona, CA 92880-2804 | Phone 800.247.8324 | Fax 951.898.7646

www.airtechniques.com

Platinum Green Business Certified

AIR TECHNIQUES equipped for life®

© 2017 Air Techniques, Inc. 9922-86 Rev. BE